JVC

SERVICE MANUAL

MULTI-CHANGER CONTROL RECEIVER

KS-RT60 B/E/G/GI/GE

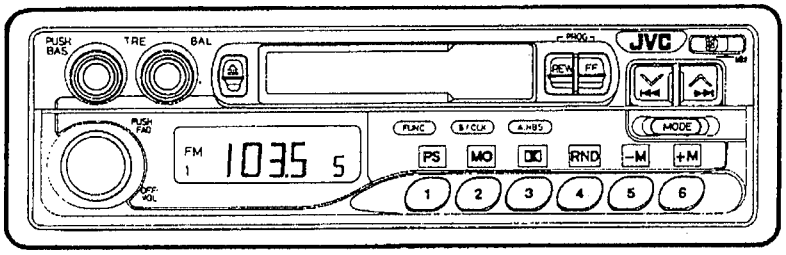

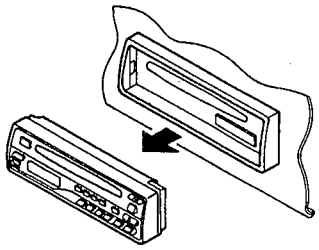

Area Suffix

B ..... U.K.
E ..... Continental Europe
G ..... Germany
GI ..... Italy
GE ..... Austria, Switzerland and Eastern Europe

Contents

1. Main Features 2
2. Specifications 2
3. Instructions(Extract) 3
4. Location of Main Parts 14
5. Removal of Main Parts 15
6. Main Adjustment 17
7. Analytic Drawing and Parts List 22
8. Wiring Connections 27
9. Block Diagram 28
10. Standard Schematic Diagram 31
11. Location of P.C. Board Parts 37
12. Electrical Parts List 39
13. Illustration of Packing and Parts List 52
14. Accessories 53

No. 49206
April 1994

ELECTRICAL CONNECTIONS

To prevent short circuits, we recommend that you disconnect the battery's negative terminal and make all electrical connections before installing the unit. If you are not sure how to install this unit correctly, have it installed by a qualified technician.

Note:
This unit is designed for a 12-volt DC negative ground. If your vehicle does not have this system, a voltage inverter is required, which can be purchased at JVC car audio dealers.

- Maximum input of the speakers should be more than 22 watts at the rear and 22 watts at the front, with an impedance of 4 to 8 ohms.

CAUTIONS:
As this unit uses BTL (Balanced Transformerless) amplifier circuitry (floating ground system), please comply with the following:

1. Do NOT connect the black-lined speaker leads to a common point.
2. Do NOT connect the speaker leads to the metal body or chassis.
3. Cover the terminals of the leads that are NOT used with insulating tape, to prevent them from shorting.

- Be sure to ground this unit to the car's chassis.

B. Line Terminal Connections (Line Out)

Since this unit has line-out terminals, an amplifier and other equipment can be used to upgrade your car stereo system.

- With an amplifier, connect this unit's line-out terminals to the amplifier's line-in terminals.

C. Automatic Antenna Connections

To use the automatic antenna, connect its remote lead (blue with white lines) terminal. For details of installation, see the automatic antenna's Instruction Manual.

D. Memory Back-Up Lead

Connect this lead to a LIVE power source (supplied even when vehicle ignition is OFF).

E. Fader Control

- When used in a 4-speaker system
  When the PUSH FAD control is turned counterclockwise, the sound will be heard from the front speakers, and when turned clockwise, from the rear speakers.
- When used in a 2-speaker system
  Set this control to the center position.

A. 4-Speaker Connections

- When attaching the connectors, make sure a click sound is heard.
- When detaching the connectors, first disengage the lock.

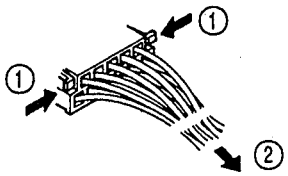

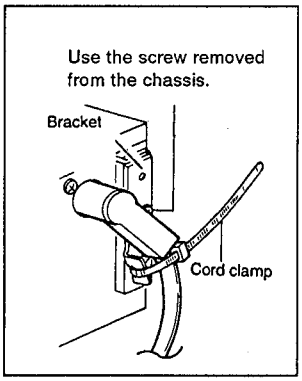

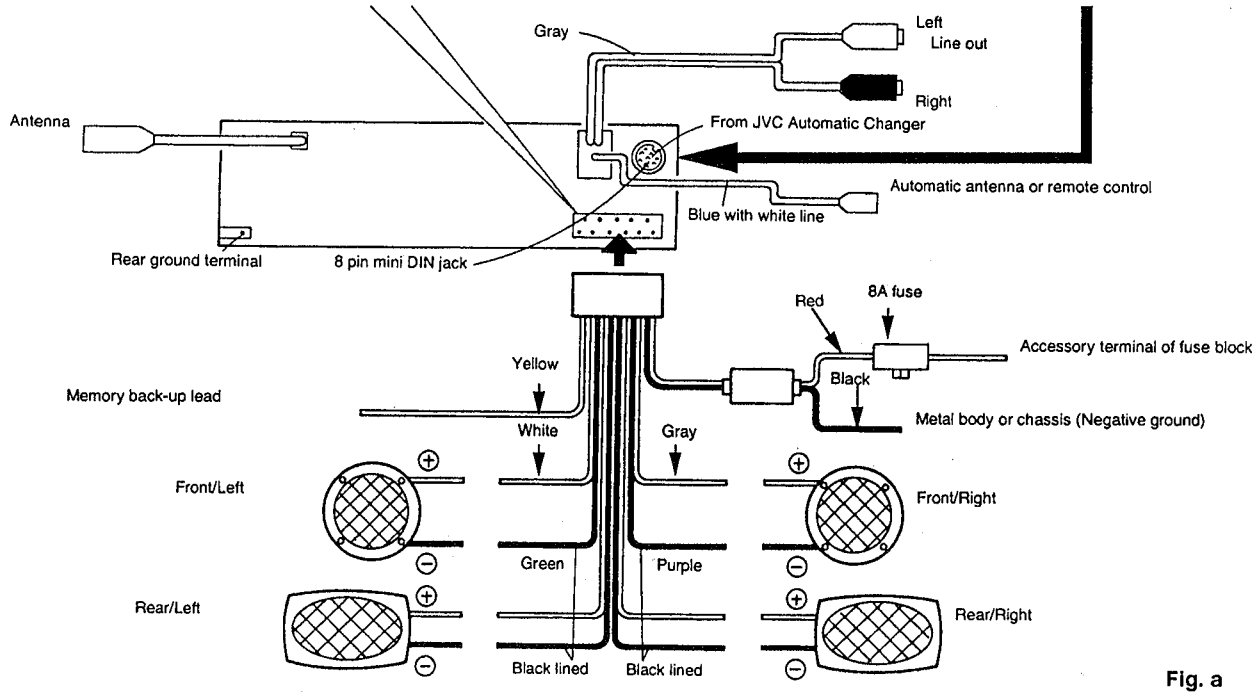

Fig. a

4. Location of Main Parts

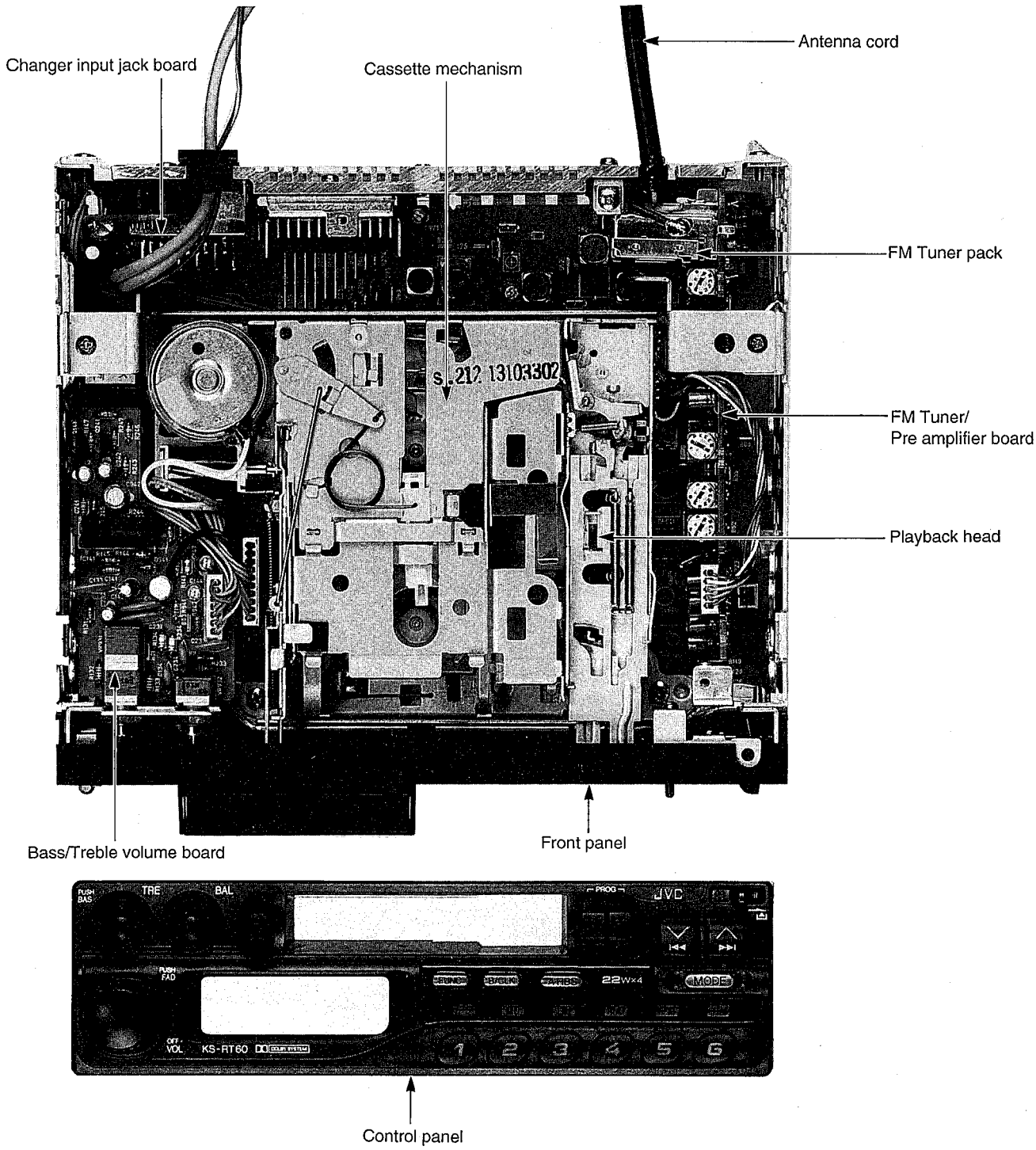

Fig. 4-1

8. Wiring Connections

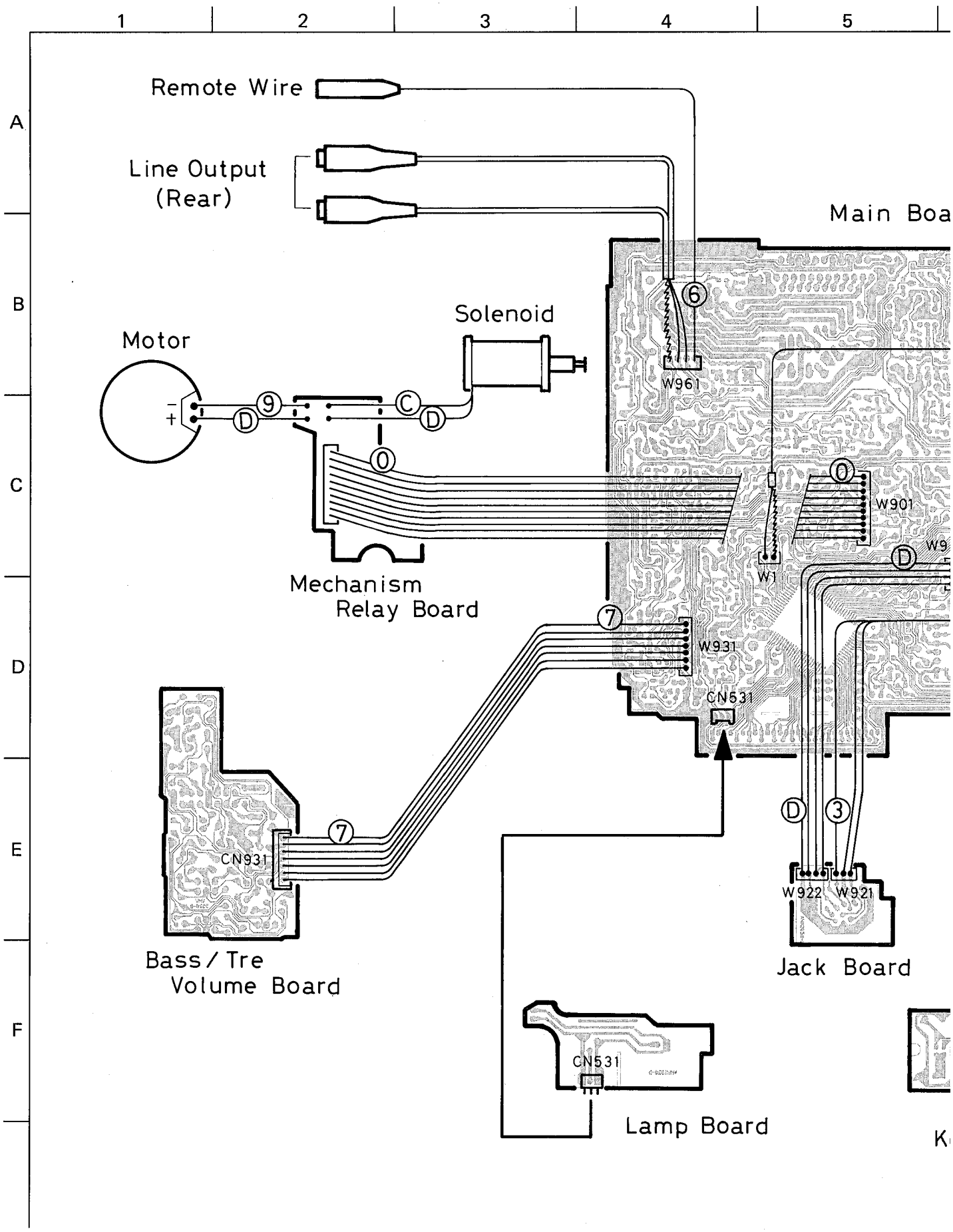

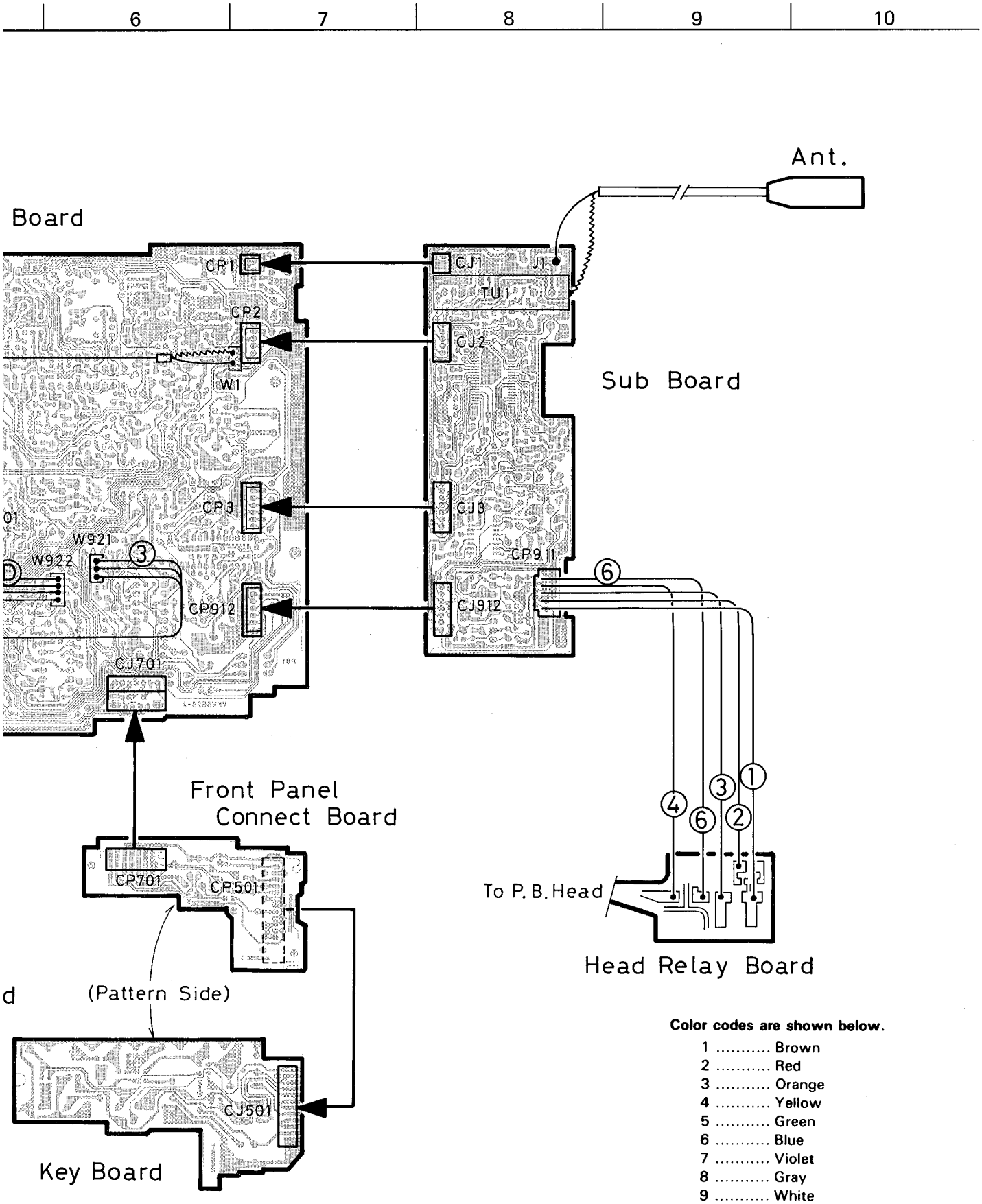

Color codes are shown below.

1 ..... Brown
2 ..... Red
3 ..... Orange
4 ..... Yellow
5 ..... Green
6 ..... Blue
7 ..... Violet
8 ..... Gray
9 ..... White
0 ..... Black
D ..... Pink
C ..... Light Blue

Fig. 8-1

9. Block Diagram

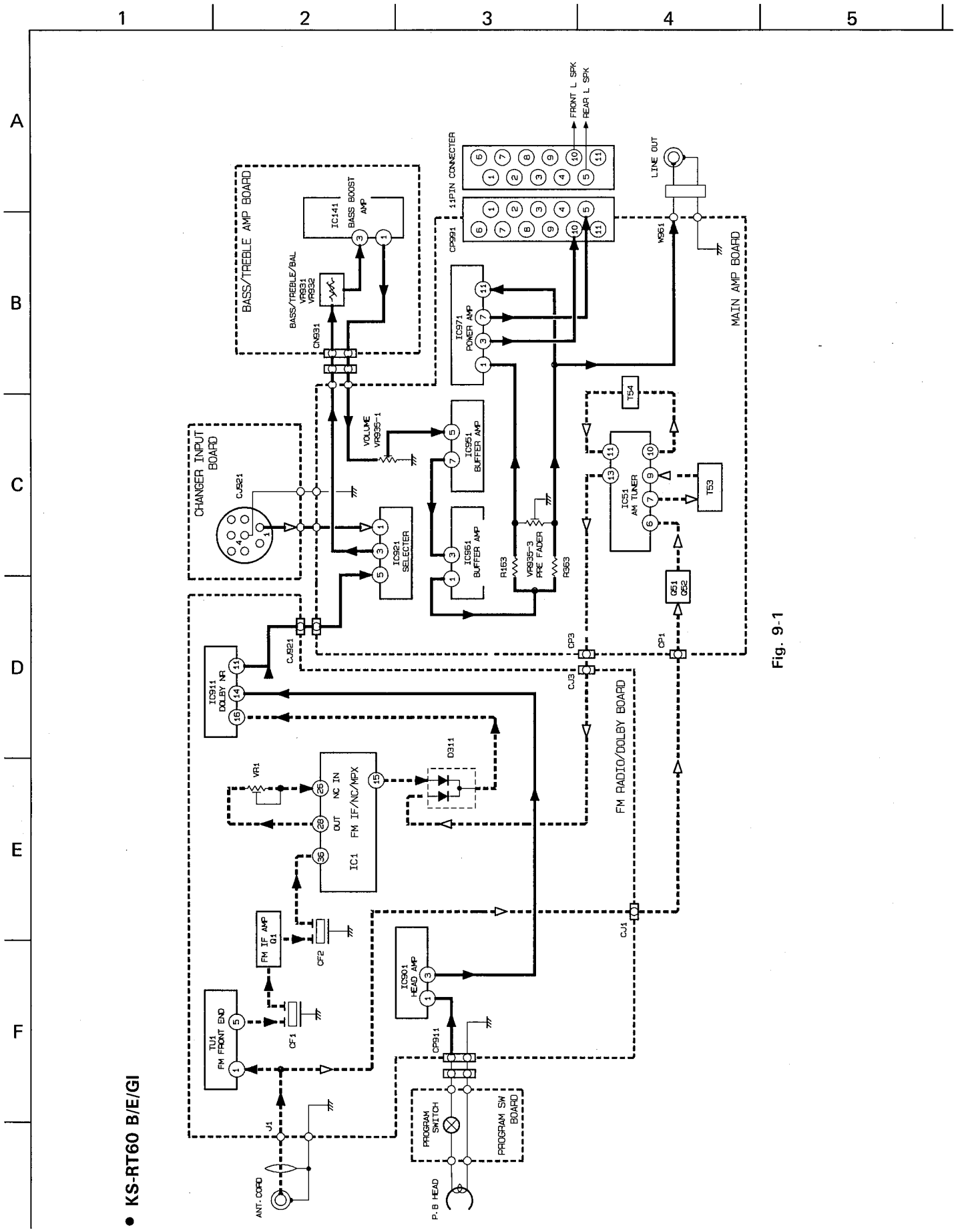

Fig. 9-1

● KS-RT60 B/E/GI

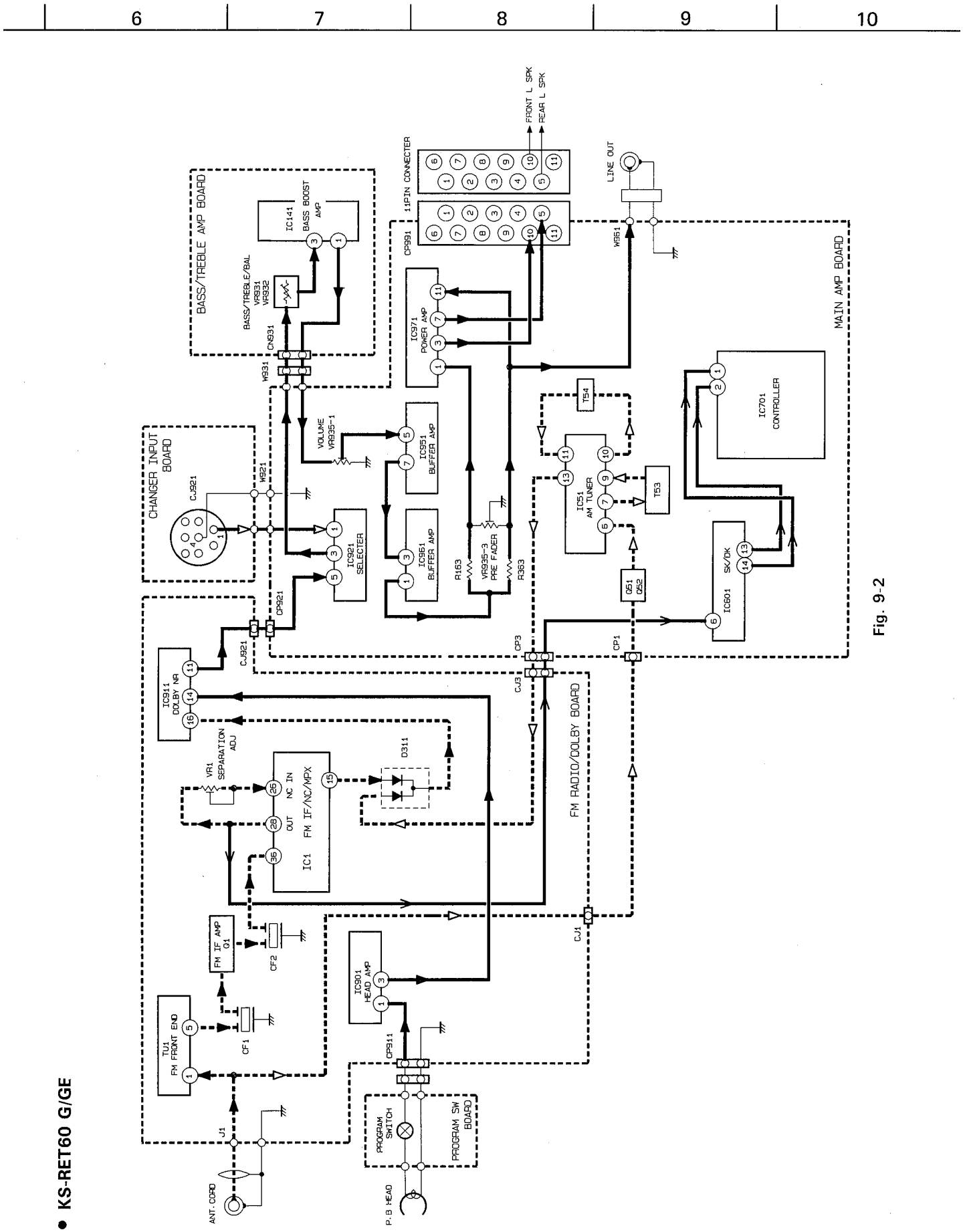

Fig. 9-2

● KS-RET60 G/GE

Main IC Block Diagram

● IC701 (CONTROLLER) : μ PD17003AGF − 652

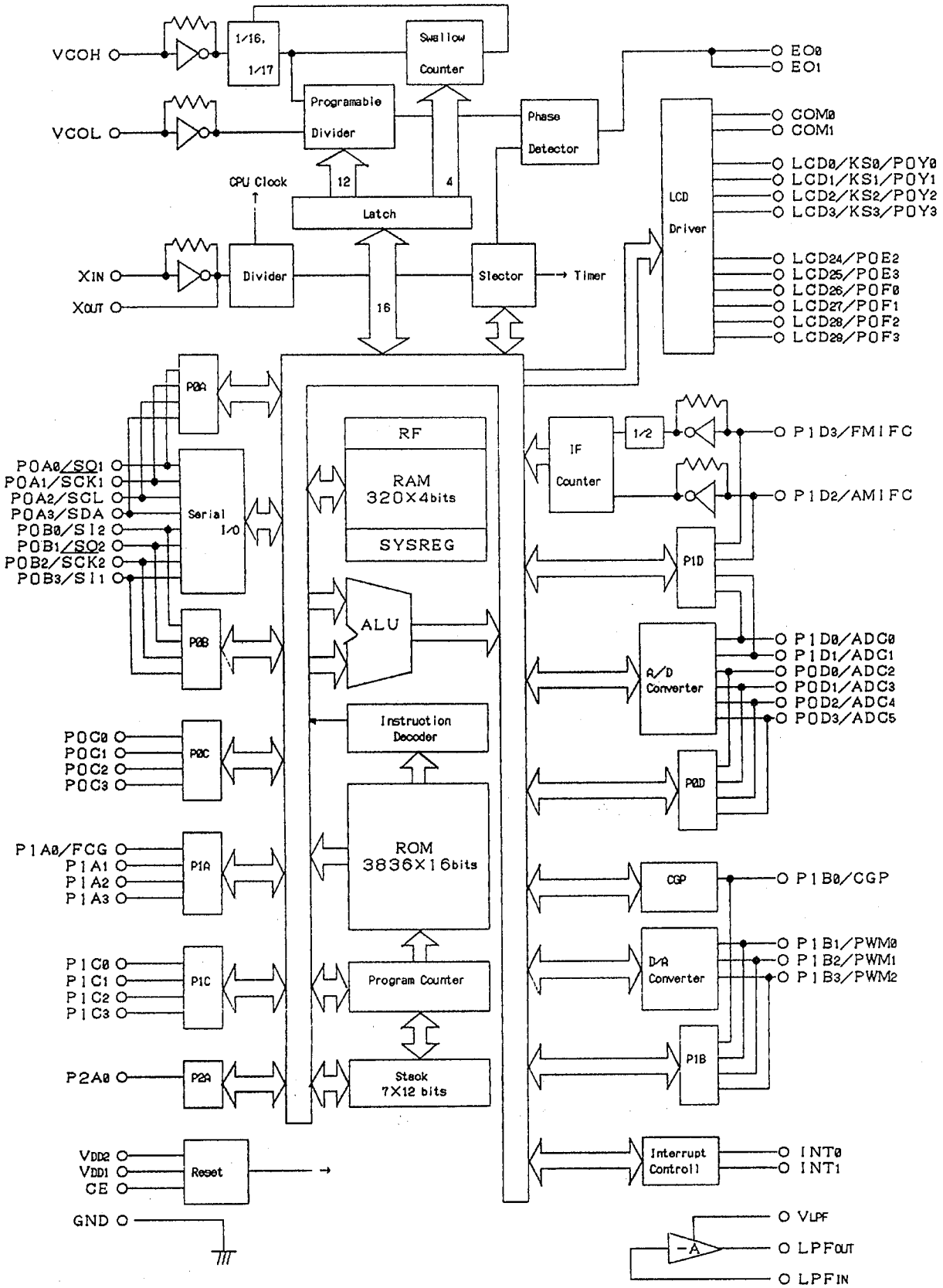

Fig. 9-3

● **IC701(μ PD17003AGF − 652): Terminal connections**

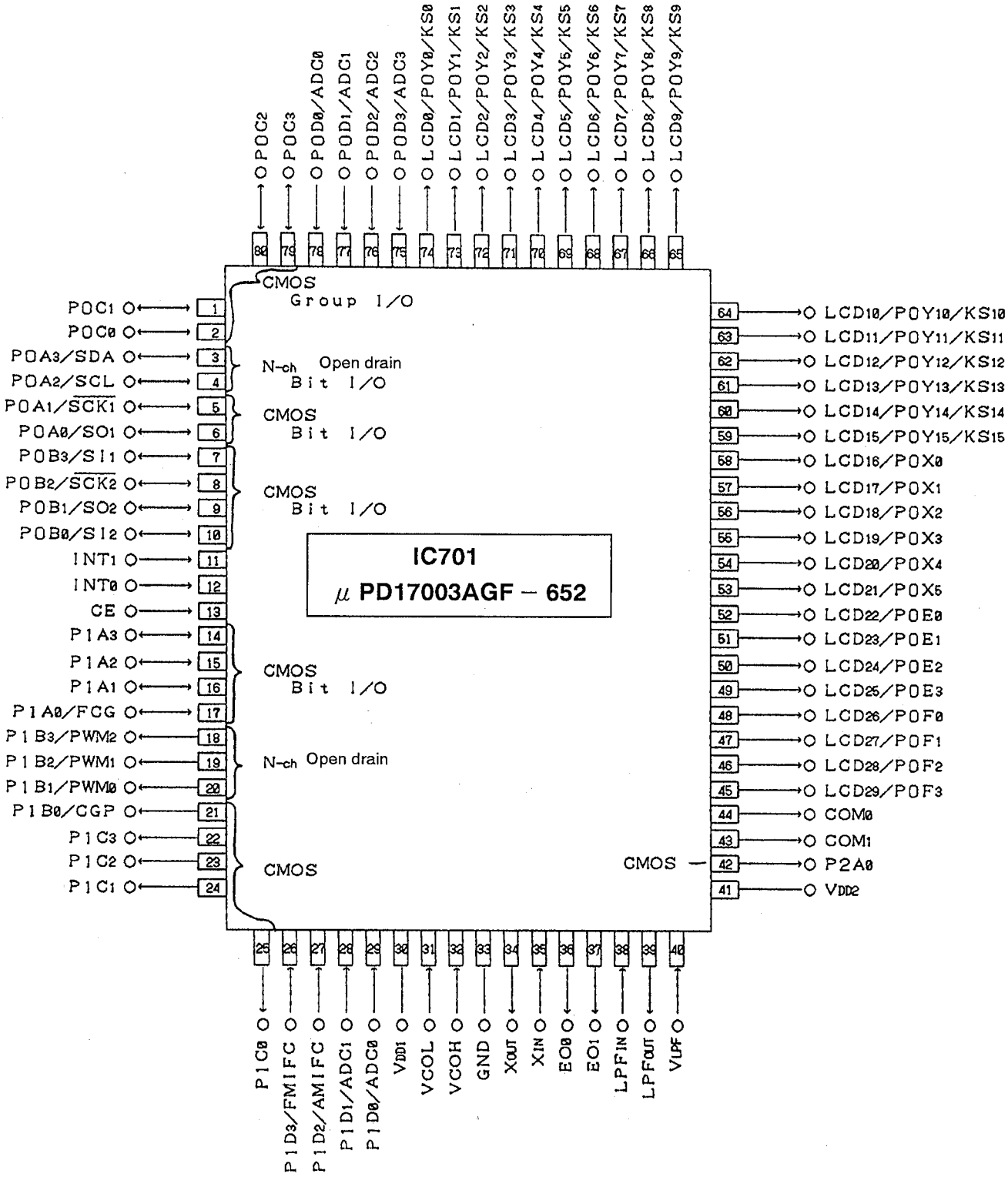

Fig. 9-4

10. Standard Schematic Diagram ■ Tuner/Pre-amplifier Circuit: Drawing No. VDH3496-003TV

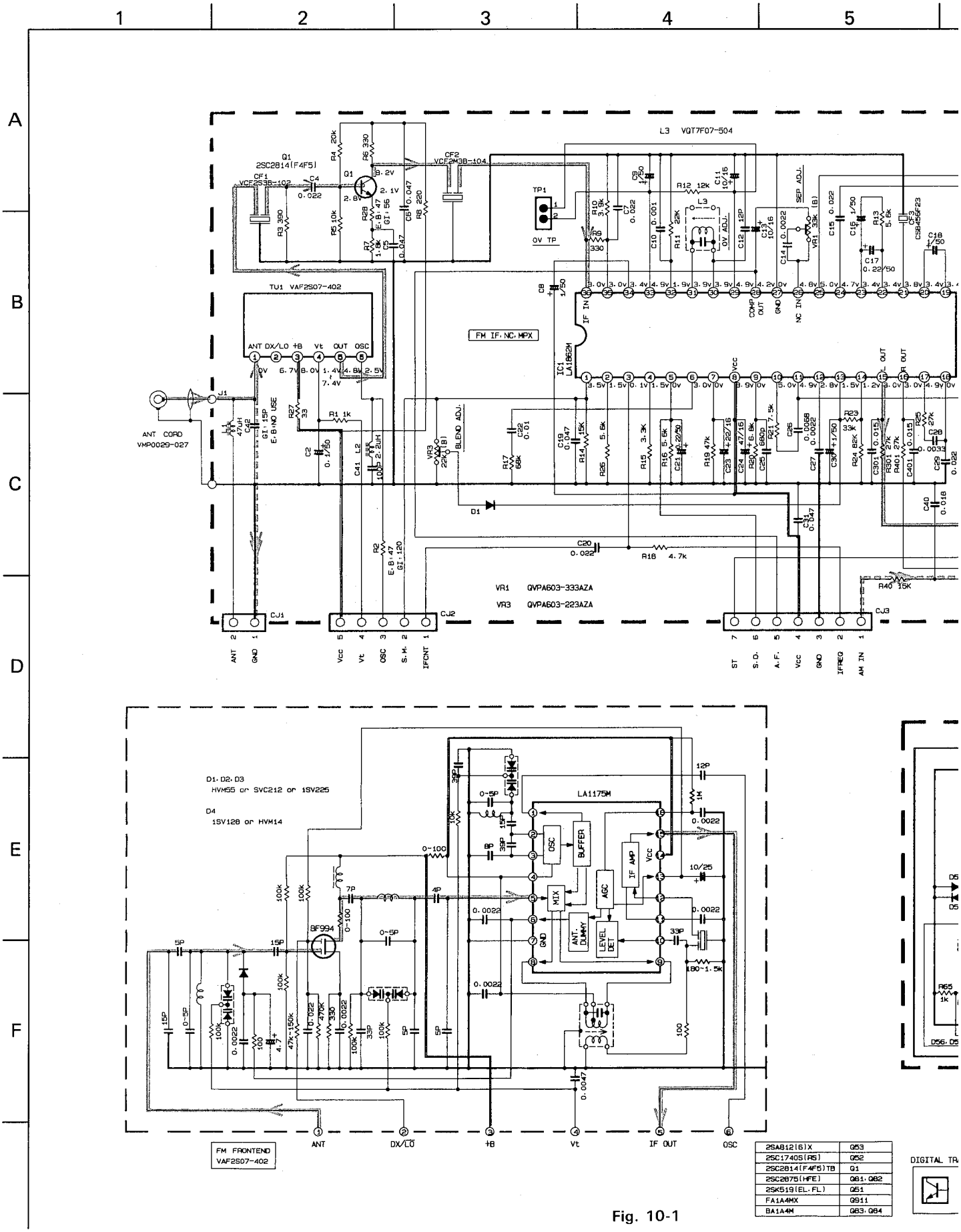

2SA812(6)X	Q53
2SC1740S(RS)	Q52
2SC2814(F4F5)TB	Q1
2SC2875(HFE)	Q81·Q82
2SK519(EL·FL)	Q51
FA1A4MX	Q911
BA1A4M	Q83·Q84

Fig. 10-1

03TV (KS-RT60 B/E/GI)

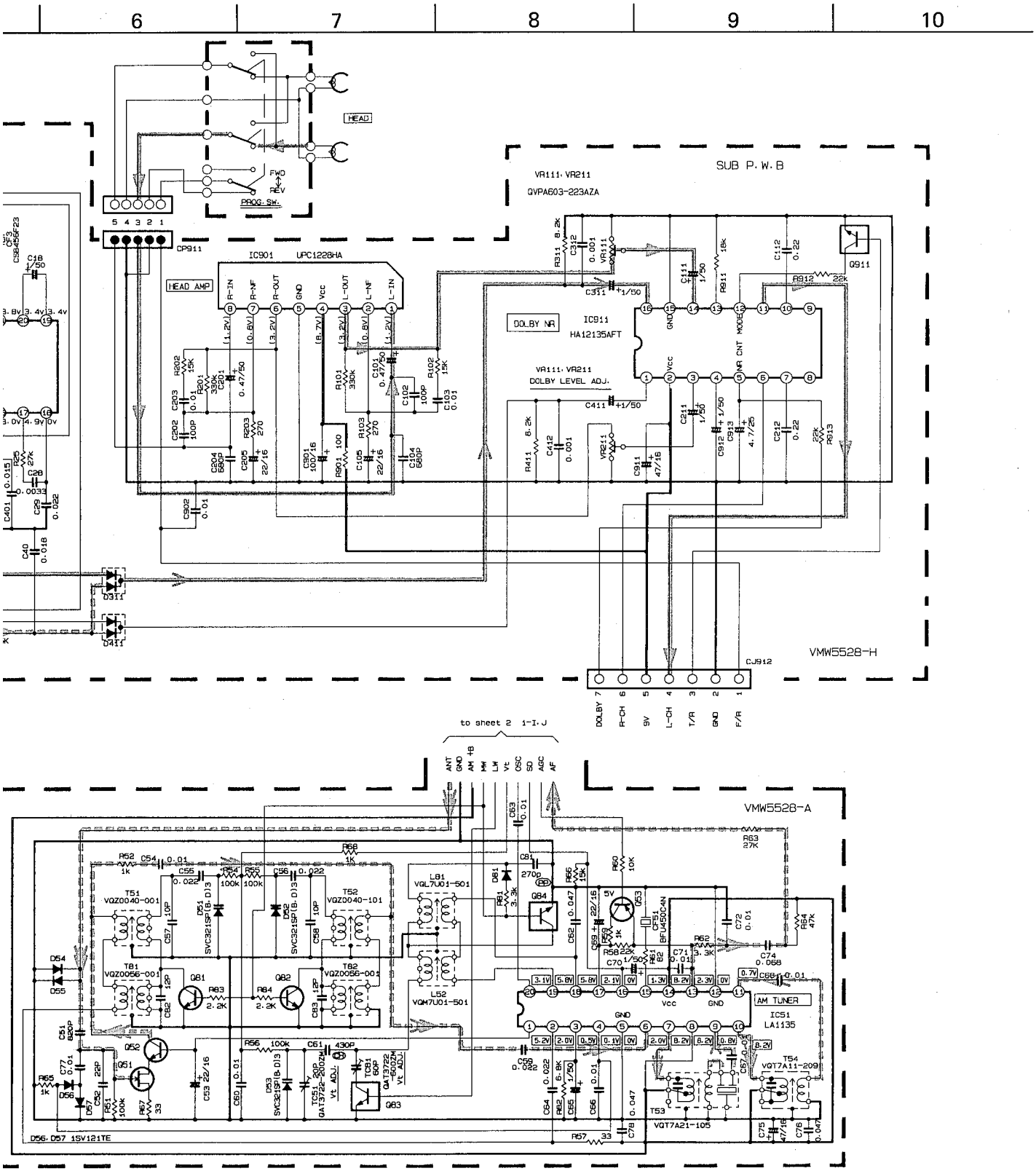

NOTES

1. VOLTAGES ARE DC-MEASURED WITH A DIGITAL VOLT METER WITHOUT INPUT SIGNAL.
   CONDITION — FM MODE. ( ) TAPE MODE. ▭ AM MODE.

2. UNLESS OTHERWISE SPECIFIED
   ALL RESISTORS ARE 1/6W ±5% METAL BLAZE RESISTOR OR 1/6W ±5% CARBON RESISTOR.
   ALL CAPACITORS ARE 50V CERAMIC CAPACITOR OR 50V MYLAR CAPACITOR.
   ALL RESISTANCE VALUES ARE IN OHM(Ω).
   ALL CAPACITANCE VALUES ARE IN μF(P=pF).
   ALL E. CAPACITORS ARE SHOWN IN THE FORM OF CAPACITANCE(μF)/RATED VOLTAGE (V).
   ALL DIODES ARE 1SS133T OR HA165
   (PP) POLYPROPYLENE CAPACITOR
   (PD) 50V ±5% MYLAR CAPACITOR OR 50V ±5% THIN FILM CAPACITOR

DIGITAL TRANSISTOR

		R1	R2
R2 → R1	RN1202 FA1A4MX	10K	10K

Tape playback signal
FM Radio signal
AM Radio signal
+B LINE

■ Tuner/Pre-Amplifier Circuit: Drawing No. VDH3496-003TV (KS-RT60 G/GE)

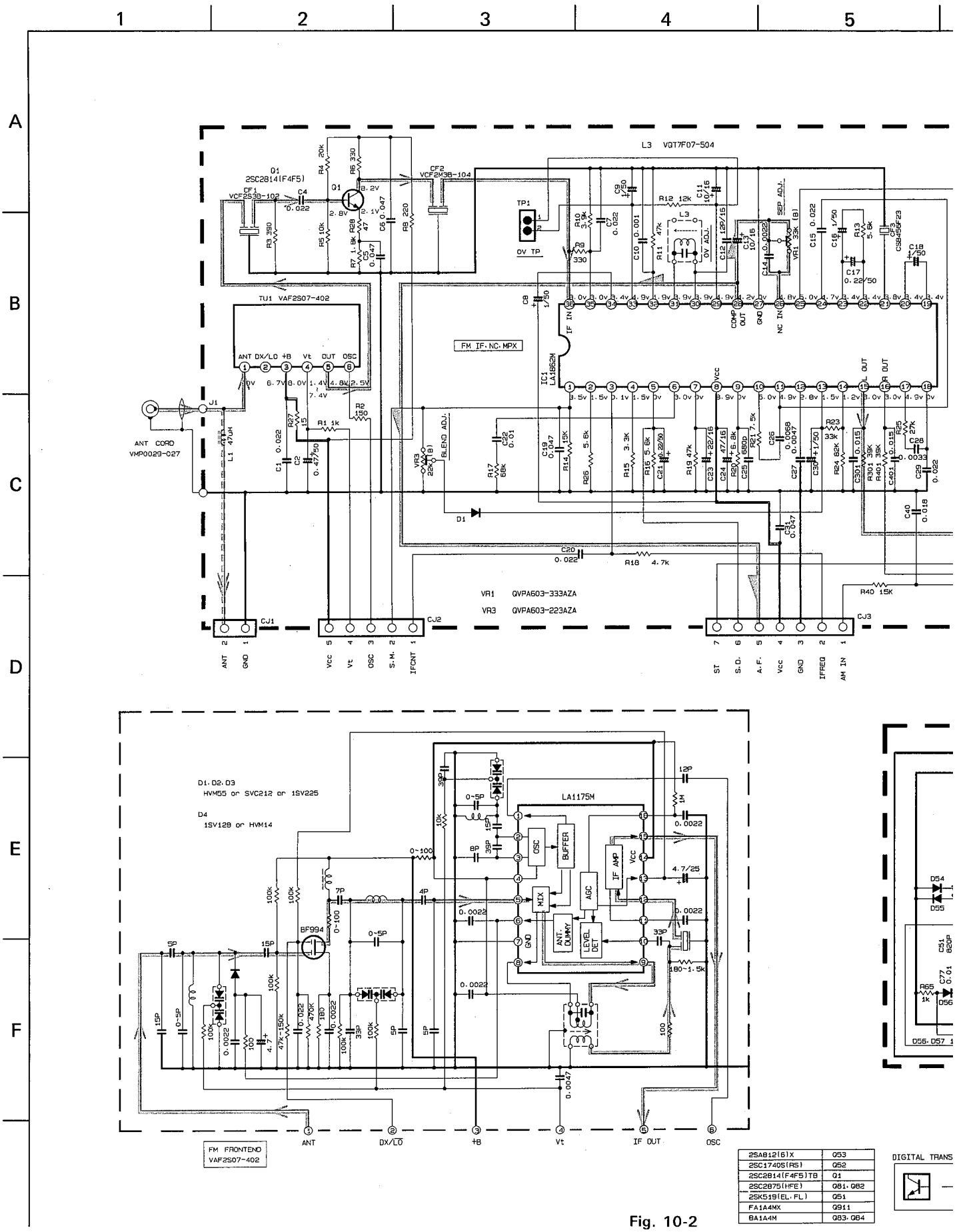

2SA812(6)X	Q53
2SC1740S(RS)	Q52
2SC2814(F4F5)TB	Q1
2SC2875(HFE)	Q81·Q82
2SK519(EL·FL)	Q51
FA1A4MX	Q911
BA1A4M	Q83·Q84

Fig. 10-2

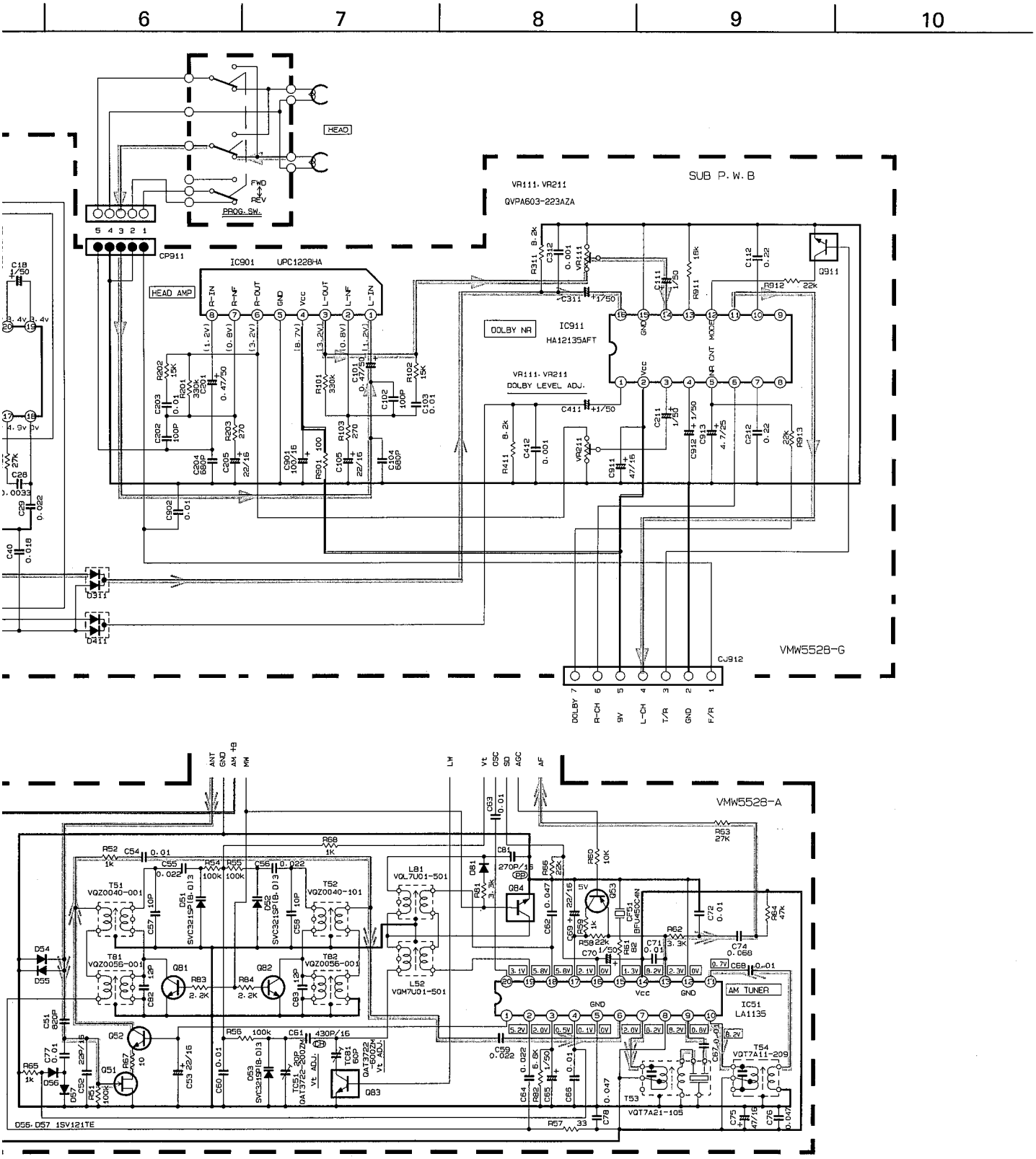

NOTES

1. VOLTAGES ARE DC-MEASURED WITH A DIGITAL VOLT METER WITHOUT INPUT SIGNAL.
   CONDITION --- FM MODE. ( ) TAPE MODE. [ ] AM MODE.

2. UNLESS OTHERWISE SPECIFIED
   ALL RESISTORS ARE 1/6W ±5% METAL GLAZE RESISTOR OR 1/6W ±5% CARBON RESISTOR.
   ALL CAPACITORS ARE 50V CERAMIC CAPACITOR OR 50V MYLAR CAPACITOR.
   ALL RESISTANCE VALUES ARE IN OHM(Ω).
   ALL CAPACITANCE VALUES ARE IN μF(P=pF).
   ALL E.CAPACITORS ARE SHOWN IN THE FORM OF CAPACITANCE(μF)/RATED VOLTAGE (V).
   ALL DIODES ARE 1SS133T OR MA165

   (PP) POLYPROPYLENE CAPACITOR
   (M) 50V ±5% MYLAR CAPACITOR OR 50V ±5% THIN FILM CAPACITOR

GITAL TRANSISTOR

	R1	R2
RN1202 FA1A4MX	10K	10K

Tape playback signal
FM Radio signal
AM Radio signal
SK/DK Signal
+B LINE

■ Changer Control/LCD Controller Circuit: Drawing No. VDH3496-003CV (KS-RT60 G/GE)

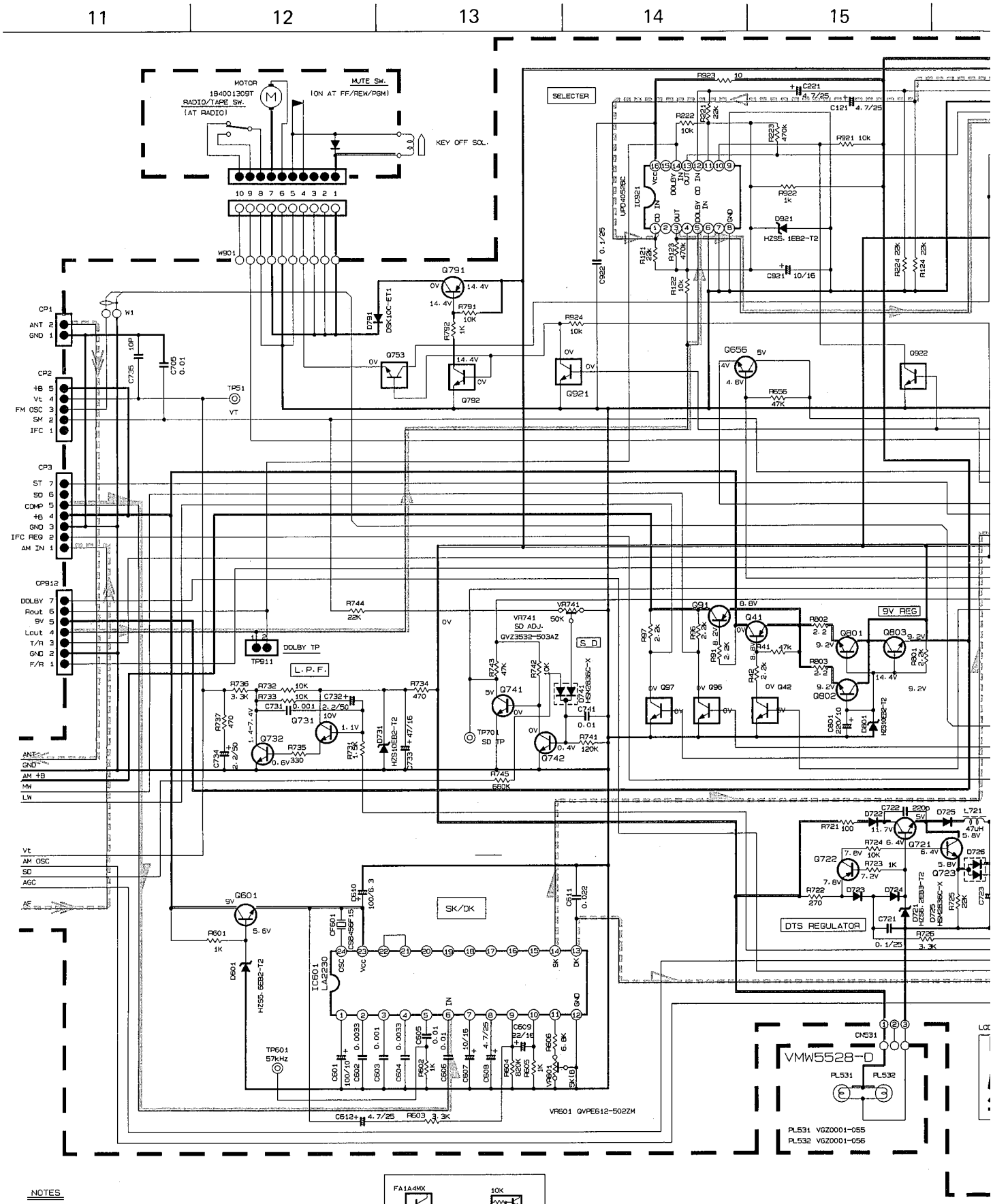

NOTES

1. VOLTAGES ARE DC-MEASURED WITH A DIGITAL VOLT METER WITHOUT INPUT SIGNAL.
   CONDITION - - - FM MODE.
2. UNLESS OTHERWISE SPECIFIED
   ALL RESISTORS ARE 1/8W ±5% METAL GLAZE RESISTOR.
   ALL CAPACITORS ARE 50V CERAMIC CAPACITOR OR 50V MYLAR CAPACITOR.
   ALL RESISTANCE VALUES ARE IN OHM(Ω).
   ALL CAPACITANCE VALUES ARE IN μF(P=pF).
   ALL E.CAPACITORS ARE SHOWN IN THE FORM OF CAPACITANCE(μF)/RATED VOLTAGE (V).
   ALL DIODES ARE 1SS133T OR MA165
   (M) 50V ±5% MYLAR CAPACITOR OR 50V ±5% THIN FILM CAPACITOR

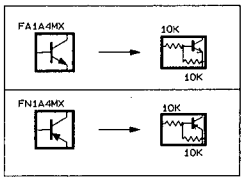

2SA816(6)X	Q91, Q722
2SB643(R, S)	Q41, Q791
2SC1623(6)X	Q601, Q656, Q723, Q731, Q732, Q741, Q742
2SD973(R, S)	Q721, Q801, Q802, Q803
FA1A4MX	Q42, Q96, Q97, Q753, Q781, Q782, Q792, Q921, Q922
FN1A4MX	Q651, Q751, Q752

Fig. 10-3

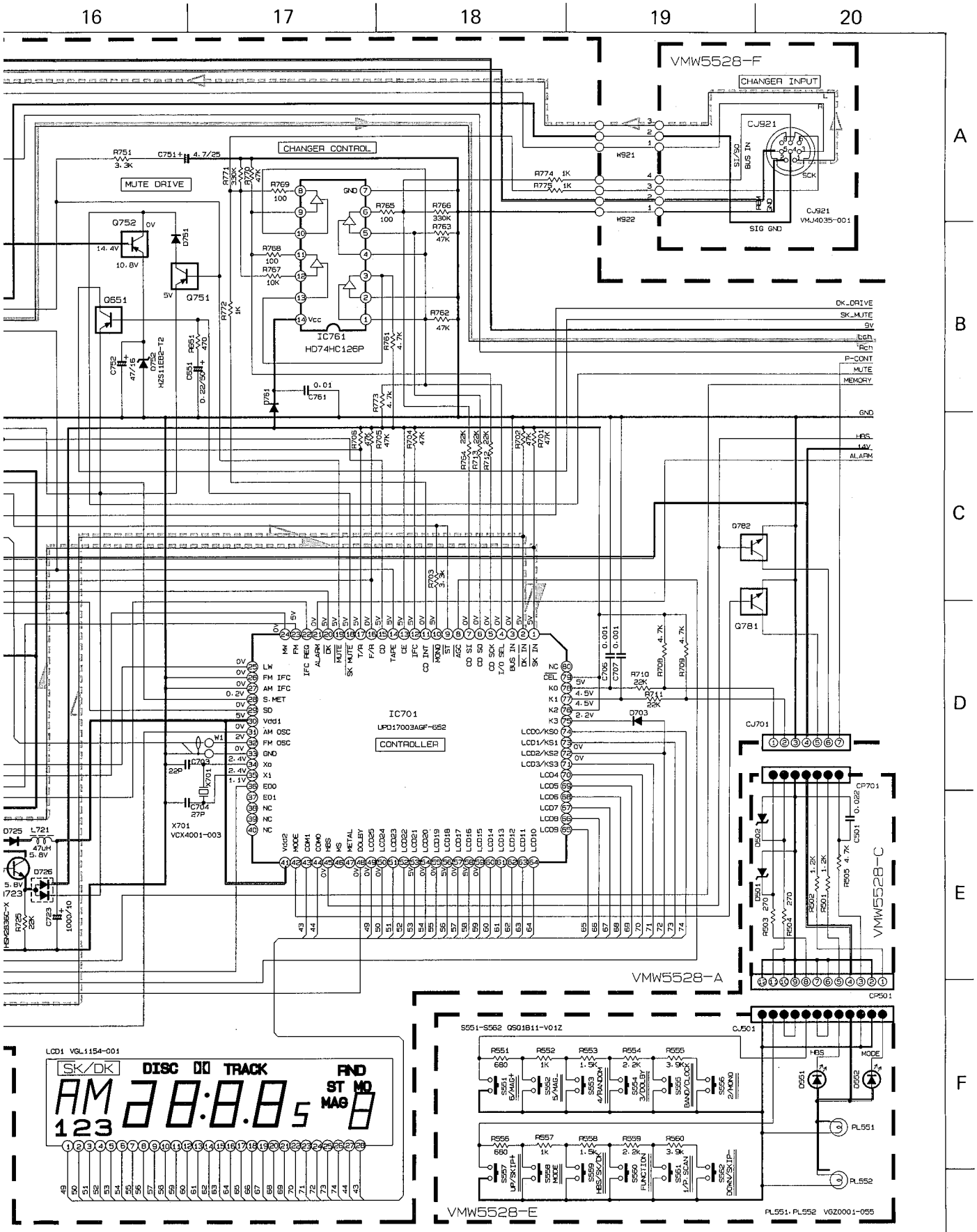
16
17
18
19
20
A
B
C
D
E
F
VMW5528-F
CHANGER INPUT
CJ921
W921
W922
SIG GND
CJ921
VMJ4035-001
CHANGER CONTROL
MUTE DRIVE
IC761
HD74HC126P
IC701
UPD17003AGF-652
CONTROLLER
X701
VCX4001-003
CJ701
CP701
CP501
VMW5528-C
VMW5528-A
VMW5528-E
LCD1 VGL1154-001
SK/DK
DISC
TRACK
AM
123
ST
MO
MAG
S551-S562 QS01B11-V01Z
CJ501
PL551
PL552
PL551, PL552 VGZ0001-055
DK_DRIVE
SK_MUTE
9V
P-CONT
MUTE
MEMORY
GND
HBS
14V
ALARM
DK Signal
SK/DK Signal
SK Signal
CD Analog signal
Tape playback signal
AM Radio signal
+B LINE

■ Changer Control/LCD Controller Circuit: Drawing No. VDH3496-002CV (KS-RT60 B/E/GI)

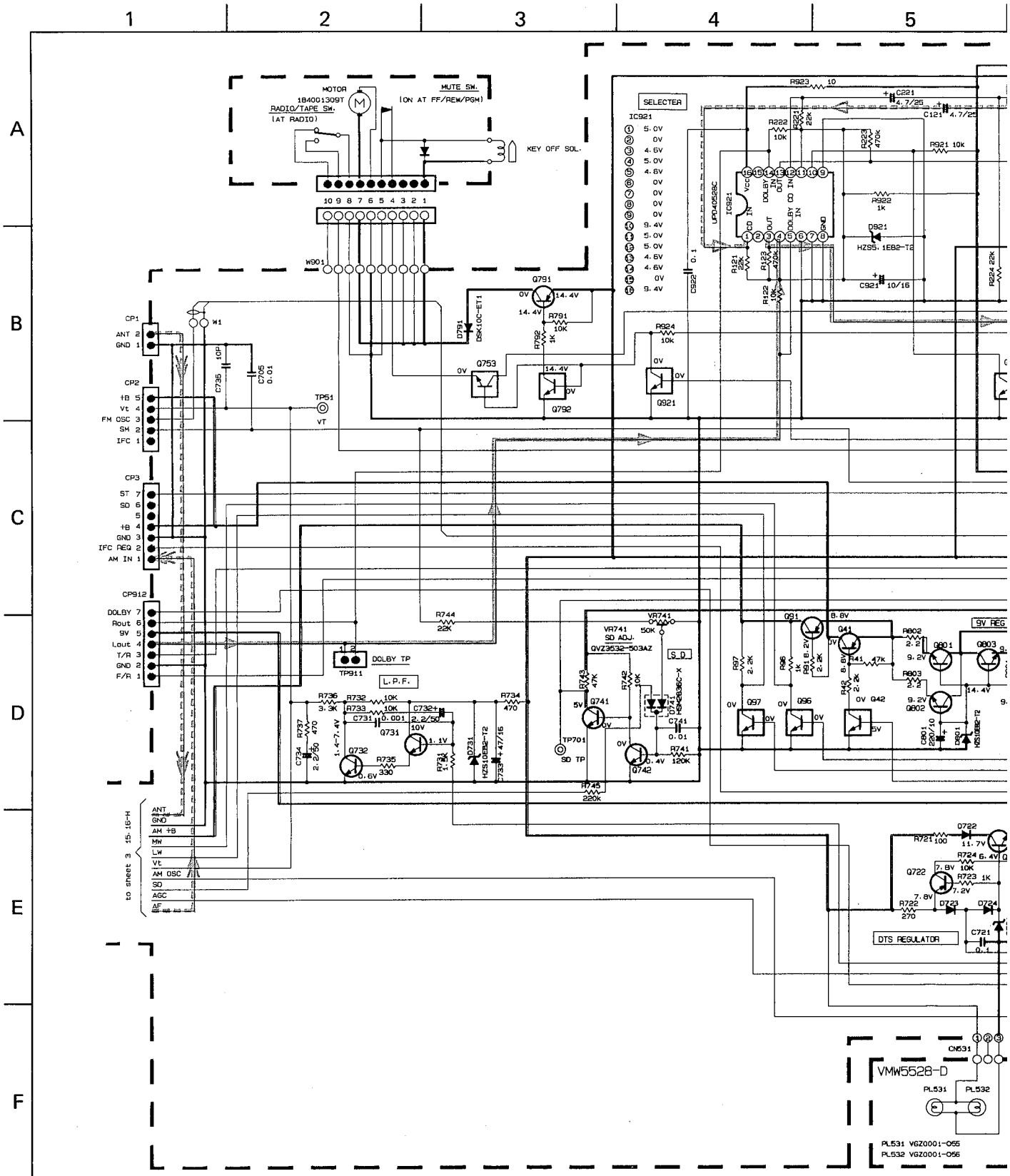

NOTES

1. VOLTAGES ARE DC-MEASURED WITH A DIGITAWOLT METER WITHOUT INPUT SIGNAL.
   CONDITION - - - FM MODE.
2. UNLESS OTHERWISE SPECIFIED
   ALL RESISTORS ARE 1/8W ±5% METAL GLAZE RESISTOR.
   ALL CAPACITORS ARE 50V CERAMIC CAPACITOR OR 50V MYLAR CAPACITOR.
   ALL RESISTANCE VALUES ARE IN OHM(Ω).
   ALL CAPACITANCE VALUES ARE IN μF(P=pF).
   ALL E.CAPACITORS ARE SHOWN IN THE FORM OF CAPACITANCE(μF)/RATED VOLTAGE (V).
   ALL DIODES ARE 1SS133T OR MA165
   (M) 50V ±5% MYLAR CAPACITOR OR 50V ±5% THIN FILM CAPACITOR

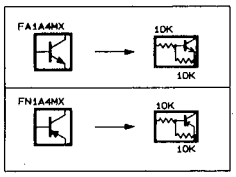

2SA816(6)X	Q91, Q722
2SB643(R, S)	Q41, Q791
2SC1623(6)X	Q656, Q723, Q731, Q732, Q741, Q742
2SD973(R, S)	Q721, Q801, Q802, Q803
FA1A4MX	Q42, Q96, Q97, Q753, Q781, Q782, Q792, Q921, Q922
FN1A4MX	Q651, Q751, Q752

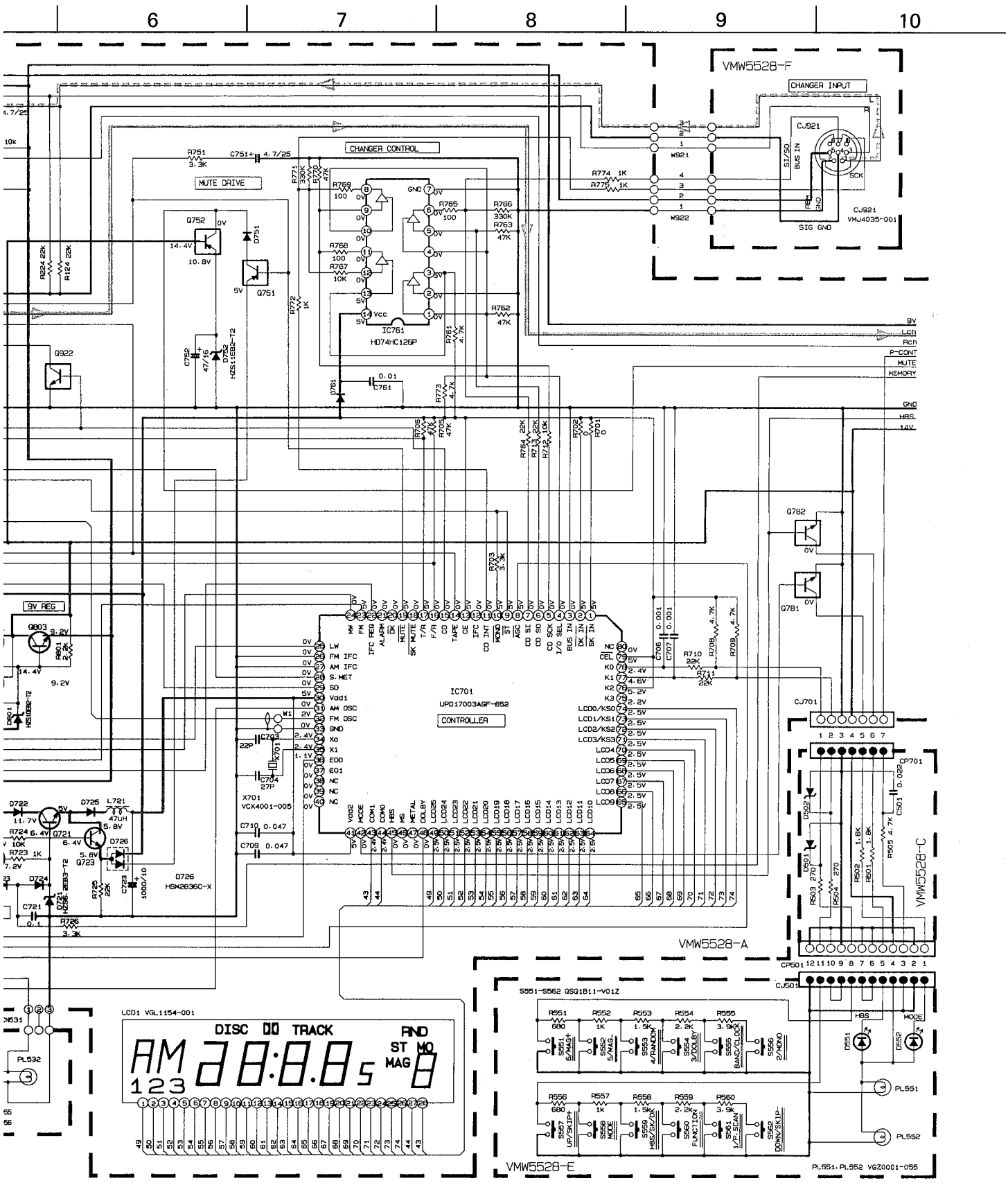
6
7
8
9
10
VMW5528-F
CHANGER INPUT
CJ921
CHANGER CONTROL
MUTE DRIVE
IC761
HD74HC126P
IC701
UPD17003AGF-652
CONTROLLER
X701
VCX4001-005
9V REG
CJ701
CP701
VMW5528-C
VMW5528-A
CP501
CJ501
LCD1 VGL1154-001
DISC TRACK
AM
ST MO
MAG
VMW5528-E
PL551
PL552
PL532
CD Analog signal
Tape playback signal
AM Radio signal
+B LINE

Fig. 10-4

■ Power Amplifier Circuit: Drawing No. VDH3496-002AV (KS-RT60 B/E/GI)

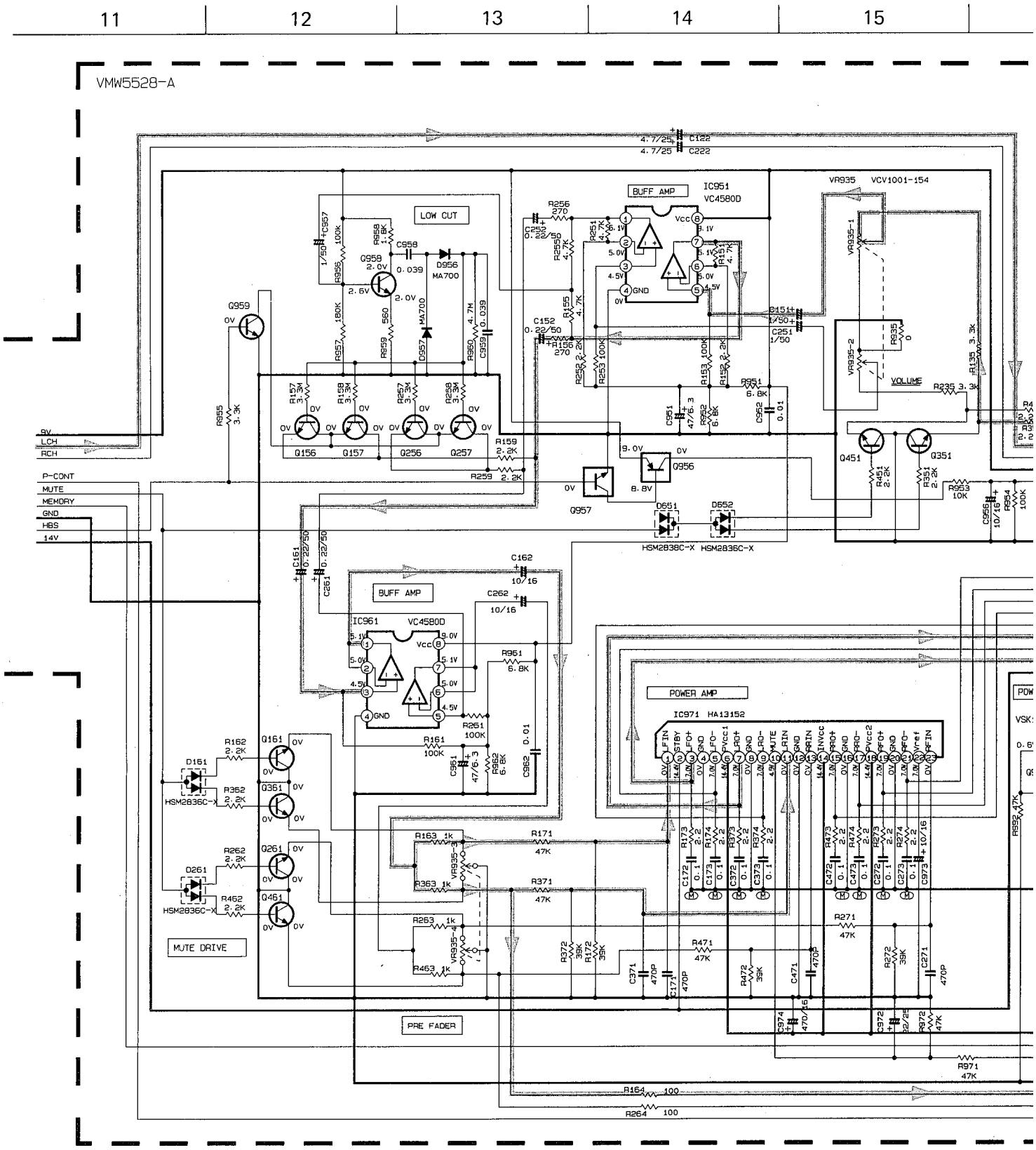

NOTES

1. VOLTAGES ARE DC-MEASURED WITH A DIGITAL VOLT METER WITHOUT INPUT SIGNAL.
   CONDITION - - - FM MODE.
2. UNLESS OTHERWISE SPECIFIED.
   ALL RESISTORS ARE 1/6W 5% CARBON RESISTOR.
   ALL CAPACITORS ARE 50V CERAMIC CAPACITOR.
   ALL RESISTANCE VALUES ARE IN OHM(Ω).
   ALL CAPACITANCE VALUES ARE IN μF(P=pF).
   ALL E.CAPACITORS ARE SHOWN IN THE FORM OF CAPACITANCE(μF) / RATED VOLTAGE(V).
   ALL DIODES ARE 1SS133T

Ⓜ - - - MYLAR CAPACITOR

2SC1623(6)X	Q156, Q256, Q157, Q257, Q161, Q261, Q361, Q461, Q958, Q959, Q992
2SK301(P,Q)TA	Q141, Q241
FA1A4MX	Q957
FN1A4MX	Q956, Q991

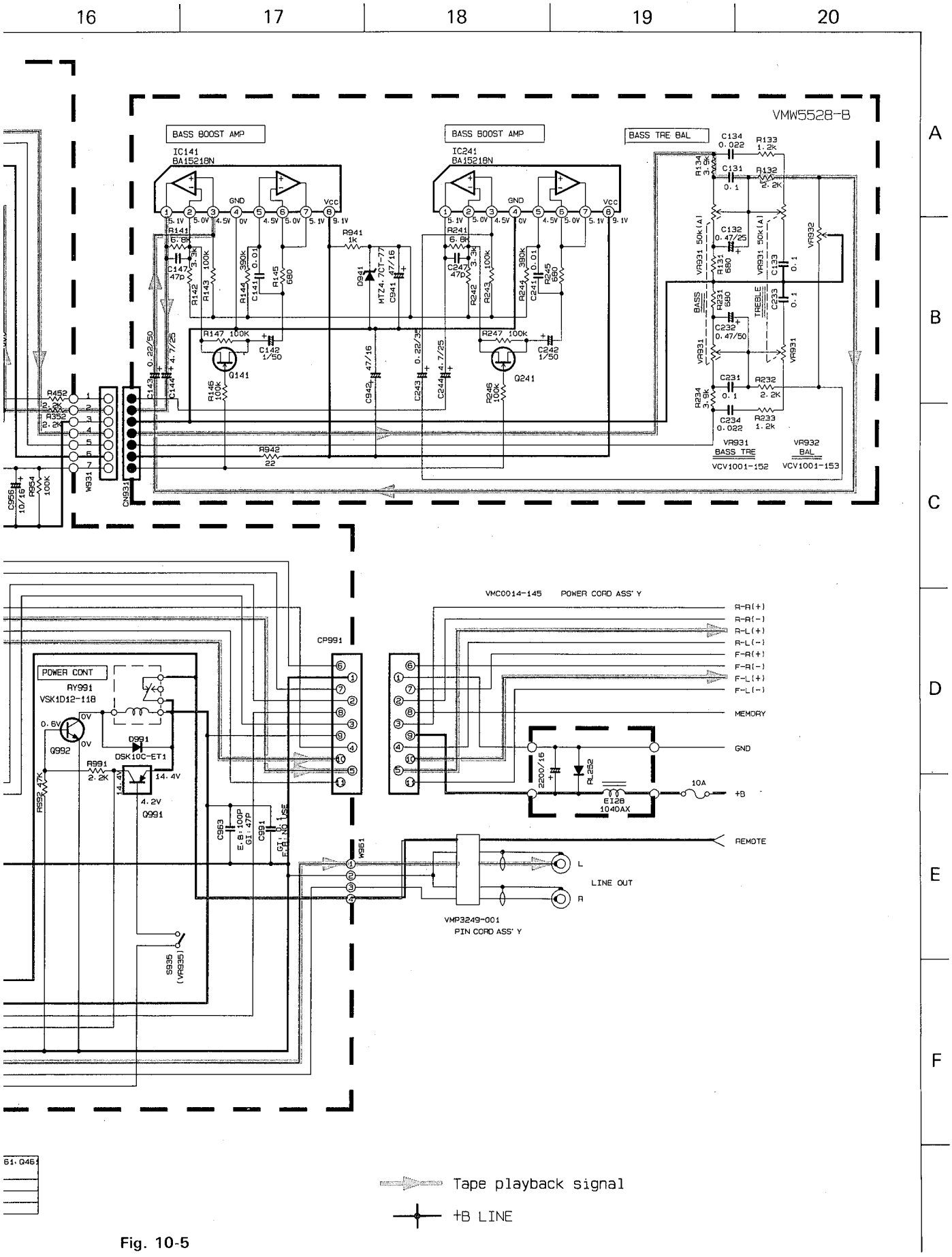
16
17
18
19
20
A
B
C
D
E
F
VMW5528-B
BASS BOOST AMP
IC141
BA15218N
BASS BOOST AMP
IC241
BA15218N
BASS TRE BAL
VR931
BASS TRE
VCV1001-152
VR932
BAL
VCV1001-153
VMC0014-145 POWER CORD ASS' Y
R-R(+)
R-R(-)
R-L(+)
R-L(-)
F-R(+)
F-R(-)
F-L(+)
F-L(-)
MEMORY
GND
+B
10A
REMOTE
LINE OUT
L
R
VMP3249-001
PIN CORD ASS' Y
POWER CONT
RY991
VSK1D12-118
CP991
W931
CN931
W961
S935
(VR935)
Tape playback signal
+B LINE

Fig. 10-5

■ Power Amplifier Circuit: Drawing No. VDH3496-003AV (KS-RT60 G/GE)

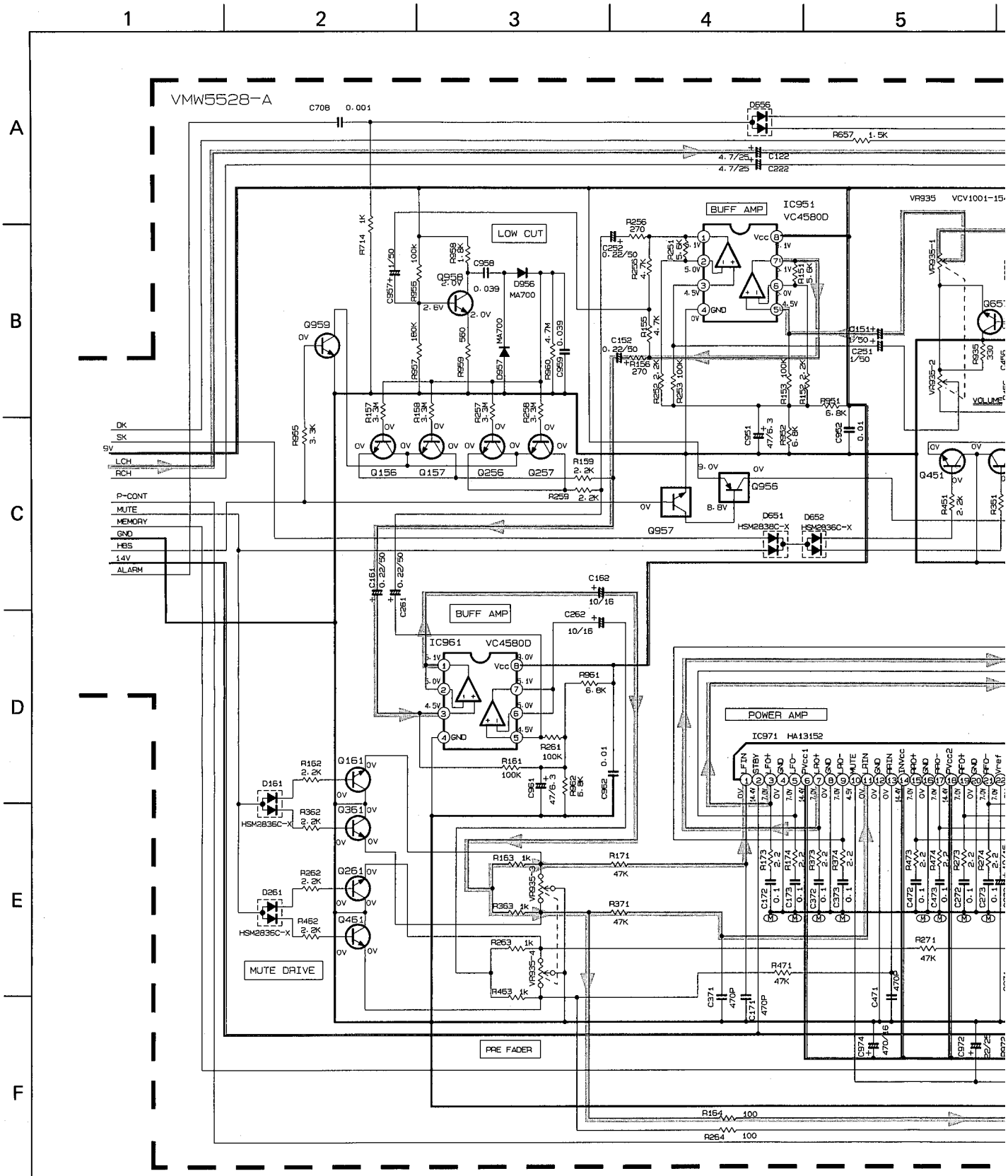

NOTES

1. VOLTAGES ARE DC-MEASURED WITH A DIGITAL VOLT METER WITHOUT INPUT SIGNAL.
   CONDITION - - - FM MODE.

2. UNLESS OTHERWISE SPECIFIED,
   ALL RESISTORS ARE 1/6W 5% CARBON RESISTOR.
   ALL CAPACITORS ARE 50V CERAMIC CAPACITOR.
   ALL RESISTANCE VALUES ARE IN OHM(Ω).
   ALL CAPACITANCE VALUES ARE IN μF(P=pF).
   ALL E.CAPACITORS ARE SHOWN IN THE FORM OF CAPACITANCE(μF) / RATED VOLTAGE(V).
   ALL DIODES ARE 1SS133T

   Ⓜ - - - MYLAR CAPACITOR

2SC1623(6)X	Q156, Q256, Q157, Q257, Q16 Q351, Q451, Q958, Q959, Q99
2SK301(P, Q)TA	Q141, Q241
FA1A4MX	Q957
FN1A4MX	Q956, Q991
2SD1048(X6, 7)TB	Q657

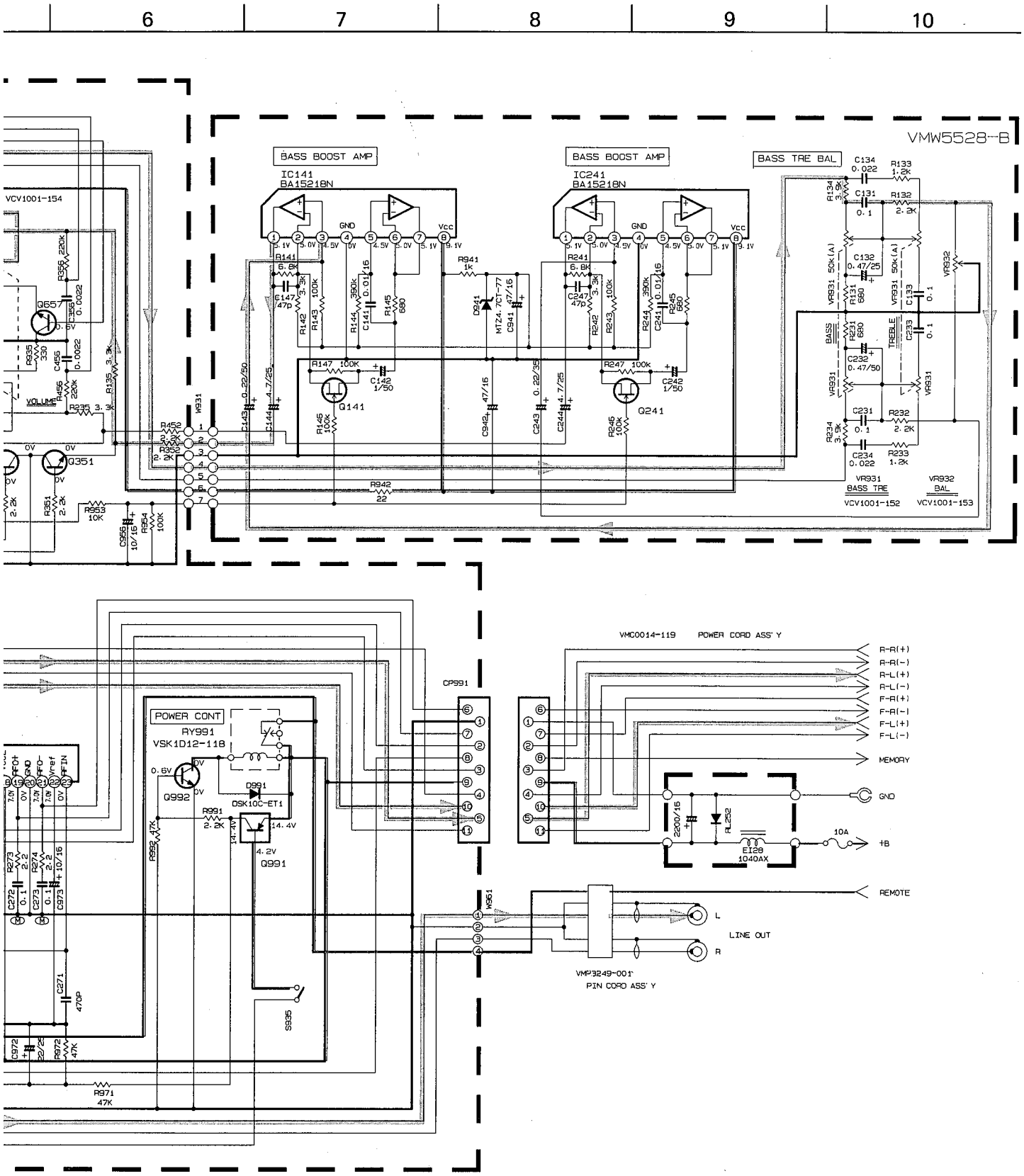

57, Q257, Q161, Q261, Q351, Q461
58, Q959, Q992

Tape playback signal

+B LINE

Fig. 10-6

11. Location of P.C. Board Parts

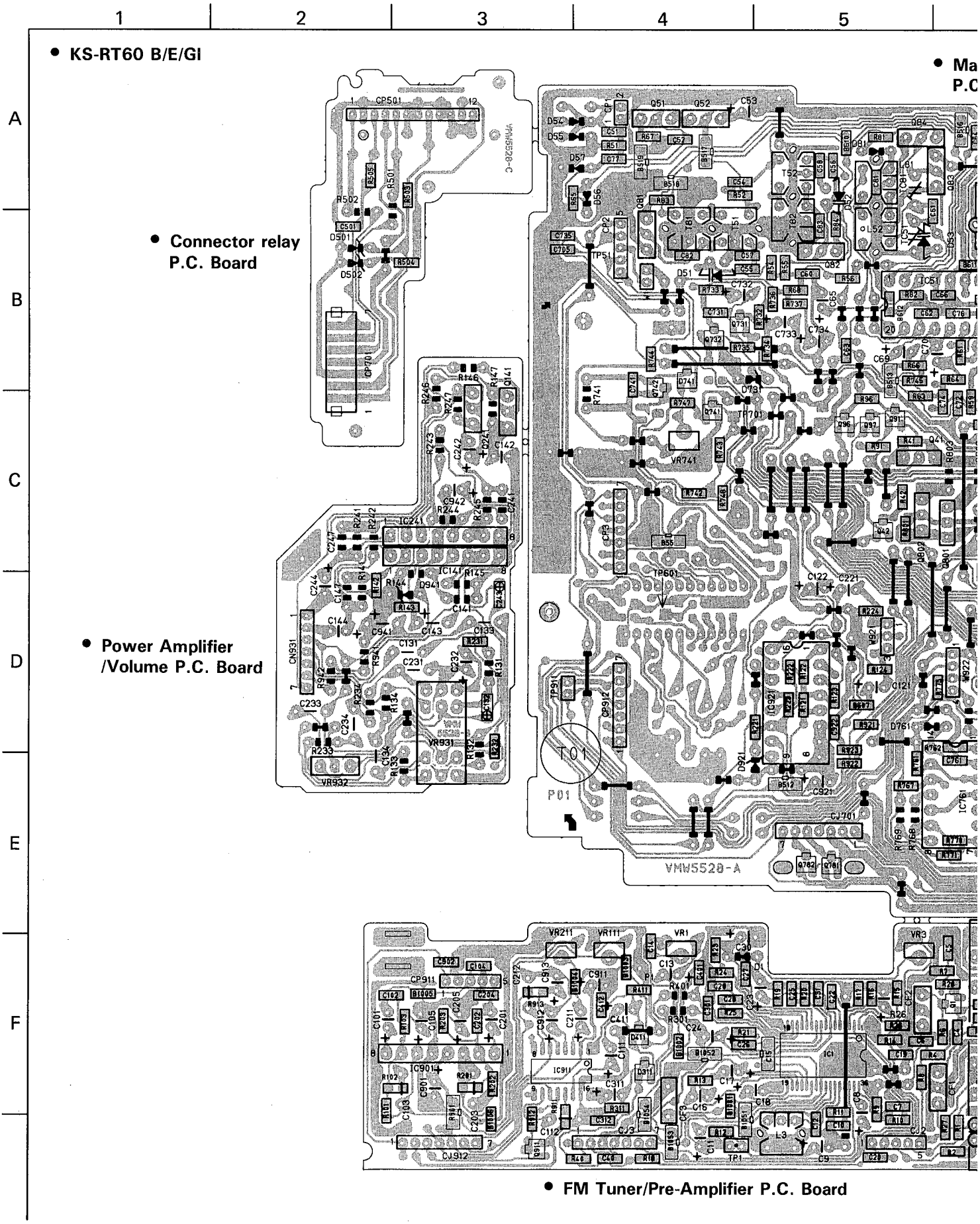

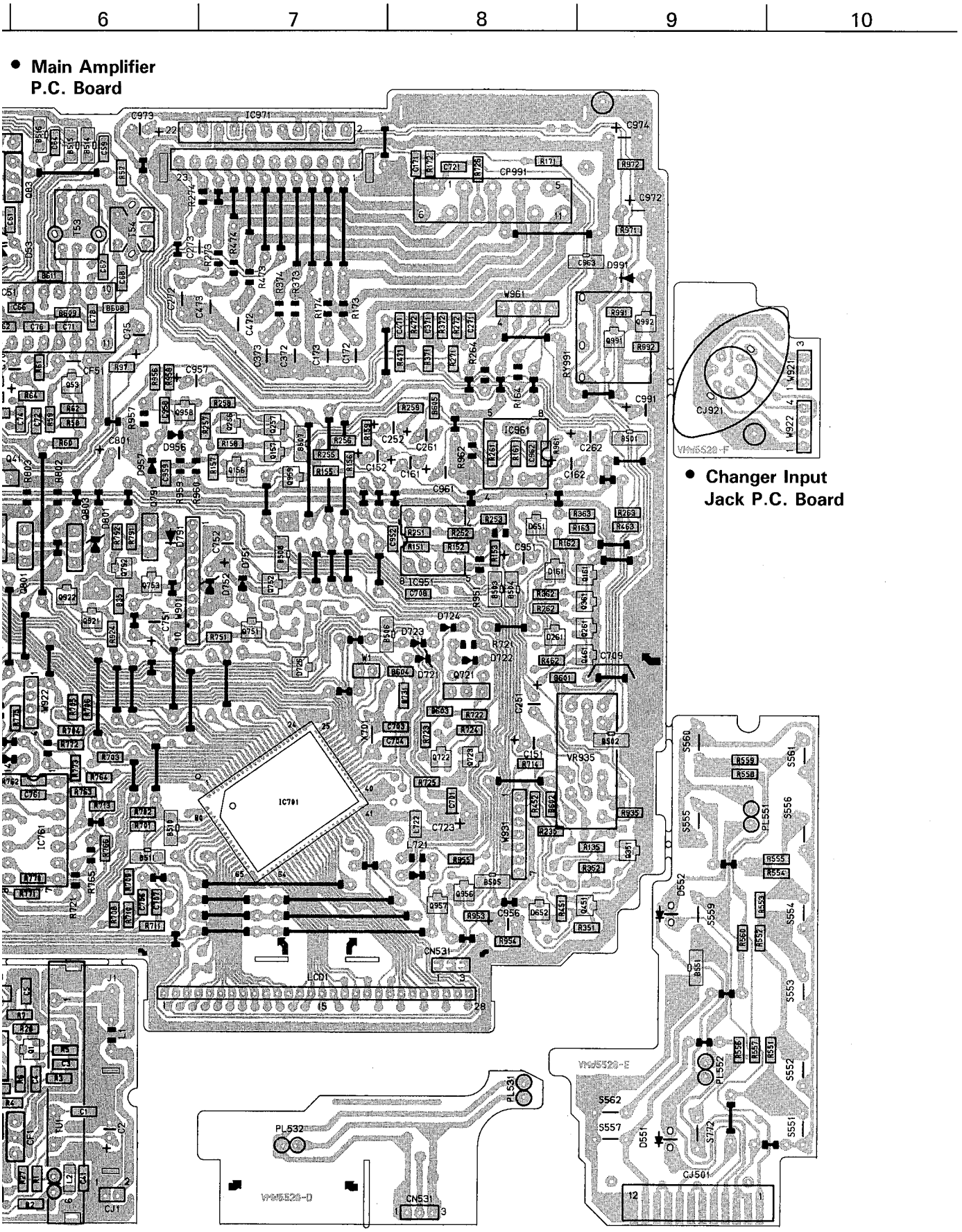
6
7
8
9
10
• Main Amplifier P.C. Board
• Changer Input Jack P.C. Board
• Lamp P.C. Board
• Operation Switch P.C. Board

Fig. 11-1

1 2 3 4 5

A B C D E F

• KS–RT60 G/GE

• M
P.

• Connector relay P.C. Board

• Power Amplifier /Volume P.C. Board

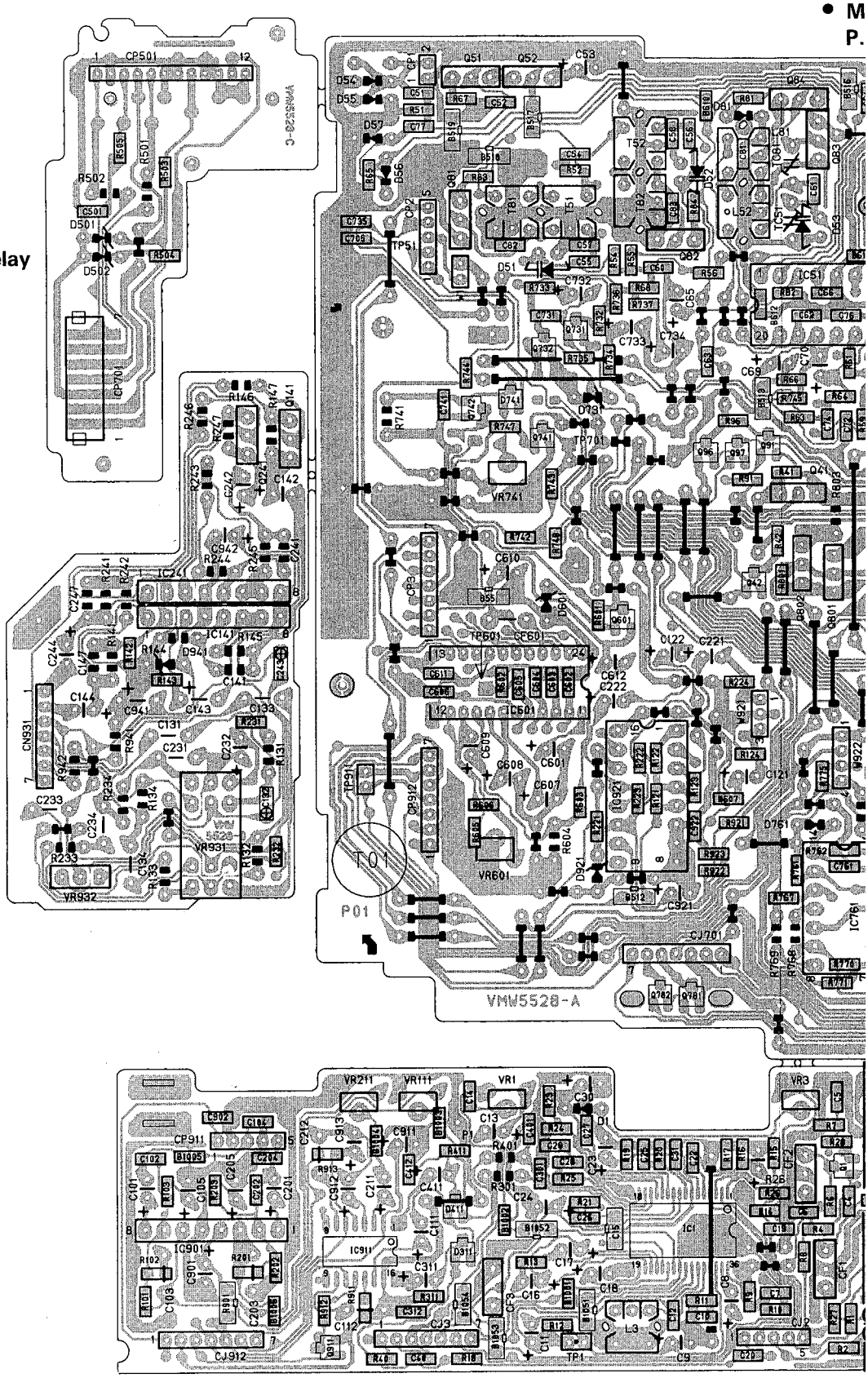

• FM Tuner/Pre-Amplifier P.C. Board

6 7 8 9 10

- **Main Amplifier P.C. Board**

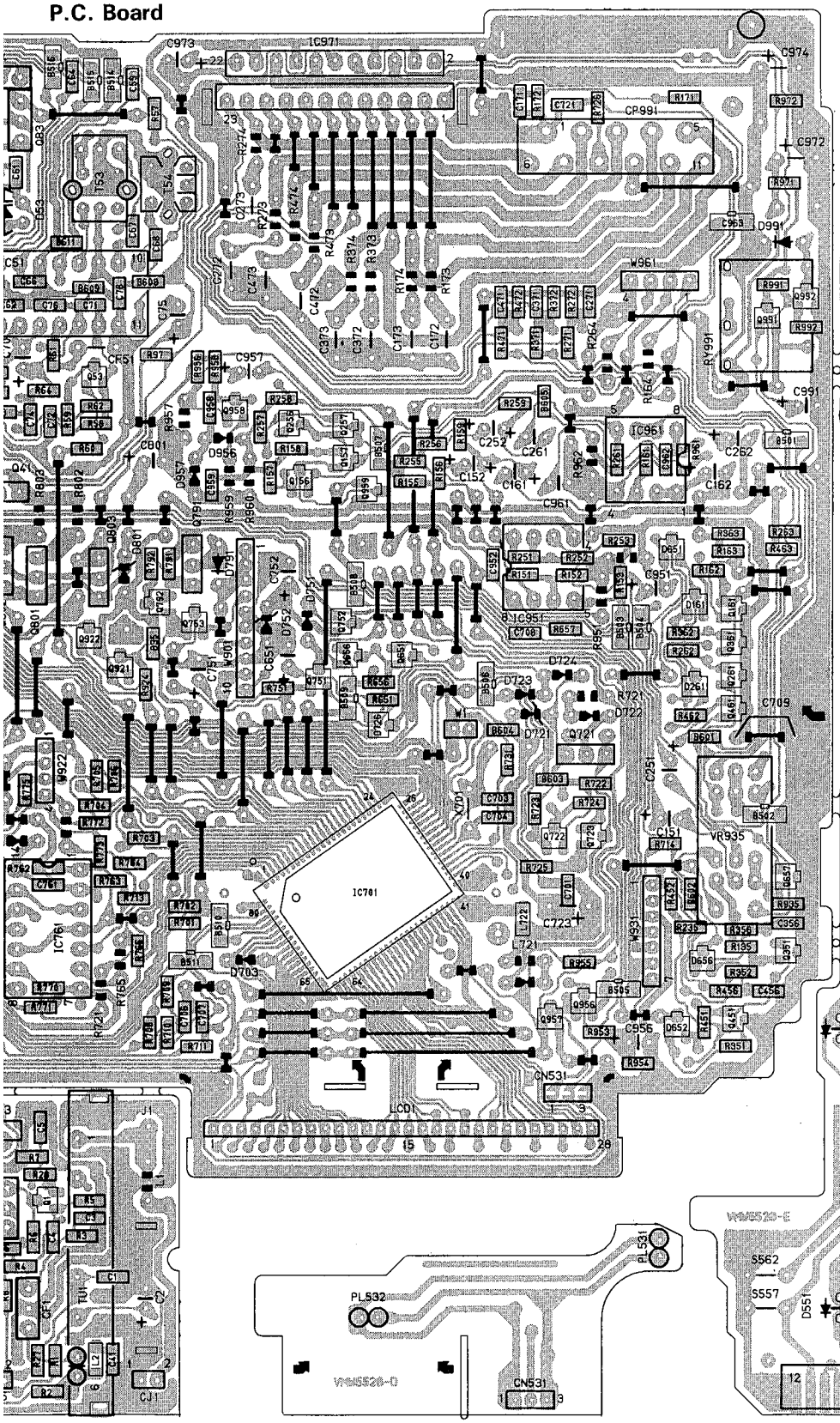

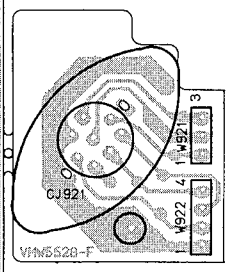

- **Changer Input Jack P.C. Board**

- **Lamp P.C. Board**

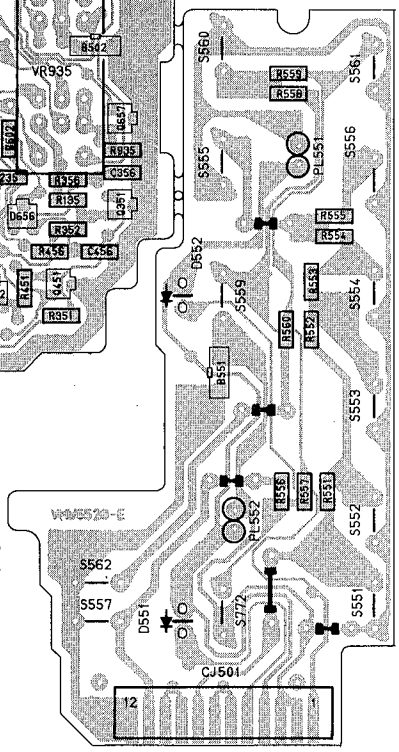

- **Operation Switch P.C. Board**

Fig. 11-2

12. Electrical Parts List

■ **Main P.C. Board Parts**

• **Mai**
P.C

• **Connector relay P.C. Board**

• **Power Amplifier /Volume P.C. Board**

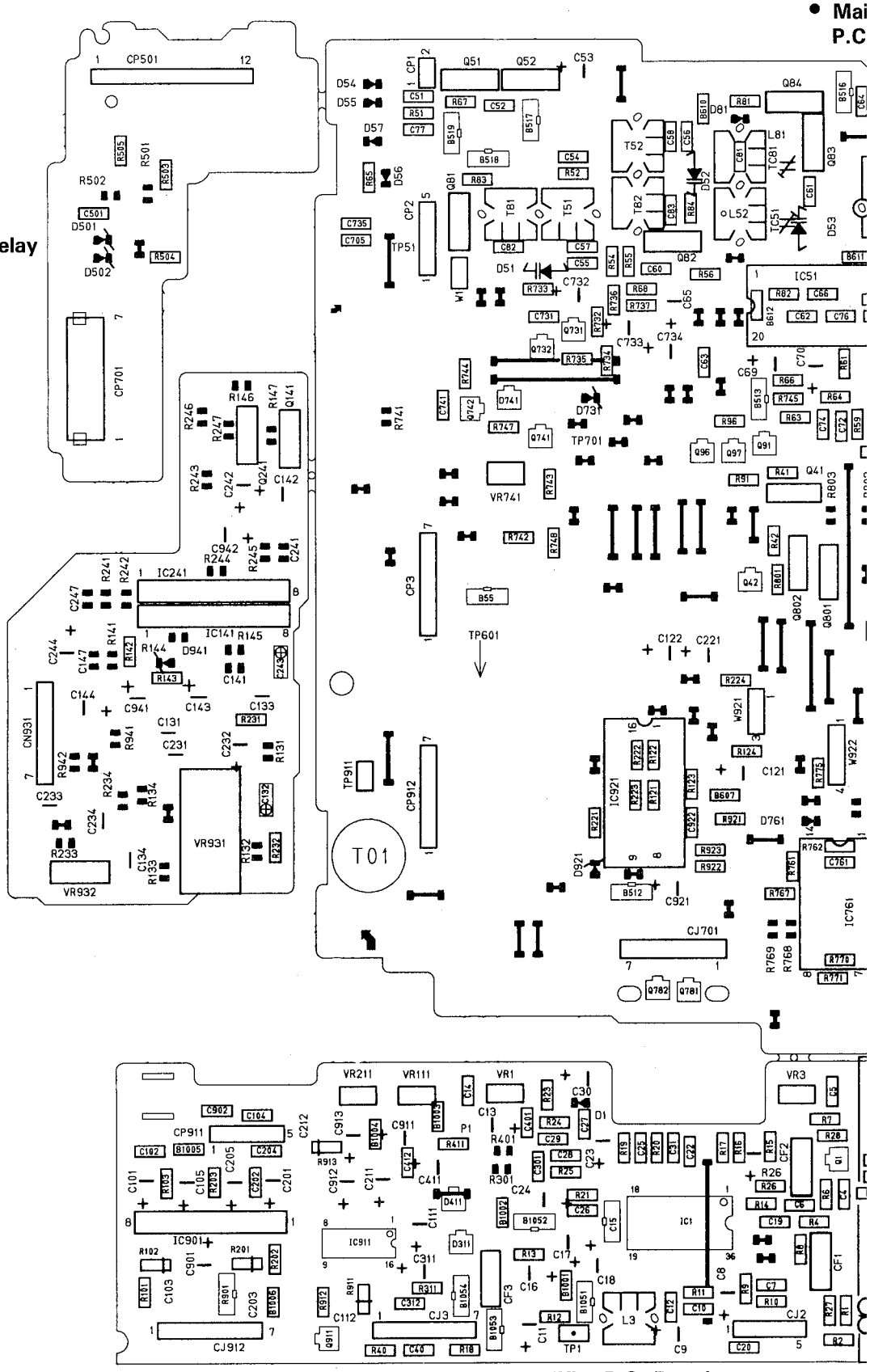

• **FM Tuner/Pre-Amplifier P.C. Board**

- **Main Amplifier P.C. Board**

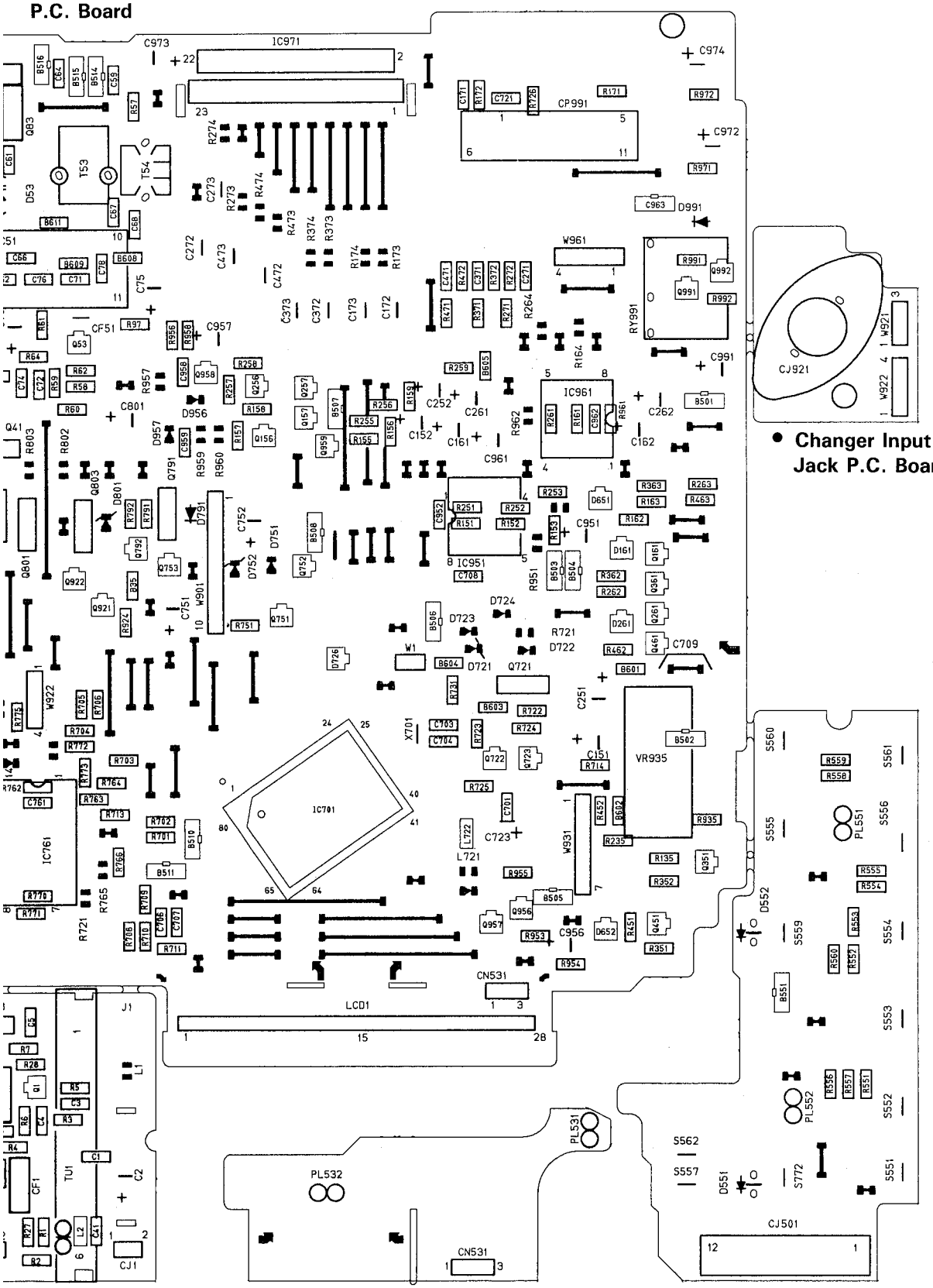

- **Changer Input Jack P.C. Board**

- **Lamp P.C. Board**

- **Operation Switch P.C. Board**

Fig. 12-1

14. Accessories

BLOCK NO. M4MM

⚠	REF.	PARTS NO.	PARTS NAME	REMARKS	QTY	SUFFIX	CLR
	A 1	VNN3496-211S	INSTRUCTIONS		1	E,B,GI,G,GE	
		VNN3496-471S	INSTRUCTIONS		1	GI	
		VNN3496-451S	INSTRUCTIONS		1	E	
		VNN3496-481S	INSTRUCTIONS		1	E	
	A 2	VNC2400-090	CAUTION SHEET		1		
	A 3	BT-20066A	WARRANTY CARD		1	B	
		BT-20135	WARRANTY CARD		1	G	
	A 4	BT20060	WARRANTY CARD		1	B	
	A 5	VKZ4027-002	PLUG NUT		1		
	A 6	VKH4871-001	MOUNT BOLT		1		
	A 7	VKZ4328-001	LOCK NUT	M5	1		
	A 8	WNS5000Z	WASHER		1		
	A 9	VKY3124-001	SIDE SPRING		2		
	A 10	SSSP4006Z	SCREW	SIDE SPRING	4		
	A 11	VKL7233-001	HOOK		2		
	A 12	VKL7649-001	CORD HOLDER		1		
	A 13	QHX5080-001	WIRE CLAMP	FOR CORD HOLDER	1		
	A 14	SPSJ1725M	MINI SCREW		1		
	A 15	VND4619-001	SHEET		1		
	A 16	VJB2014-001	HARD CASE		1		
	A 17	VYSH118-002	SPACER		1		
	A 18	FSYH3008-002	SPACER	HARD CASE:INNER	2		
	A 19	VKL3732-018SS	MOUNTING SLEEVE		1		
	A 20	VMC0014-145	11P CORD ASS'Y		1		
	A 21	FSJD2004-002	TRIM PLATE		1		
	A 22	VND3050-001	IDENTITY CARD		1		
	A 23	VKL5460-001	STAY		1		
	KIT 1	KSRT60K-SCREW	SCREW PARTS KIT	P6,A5-A13	1		
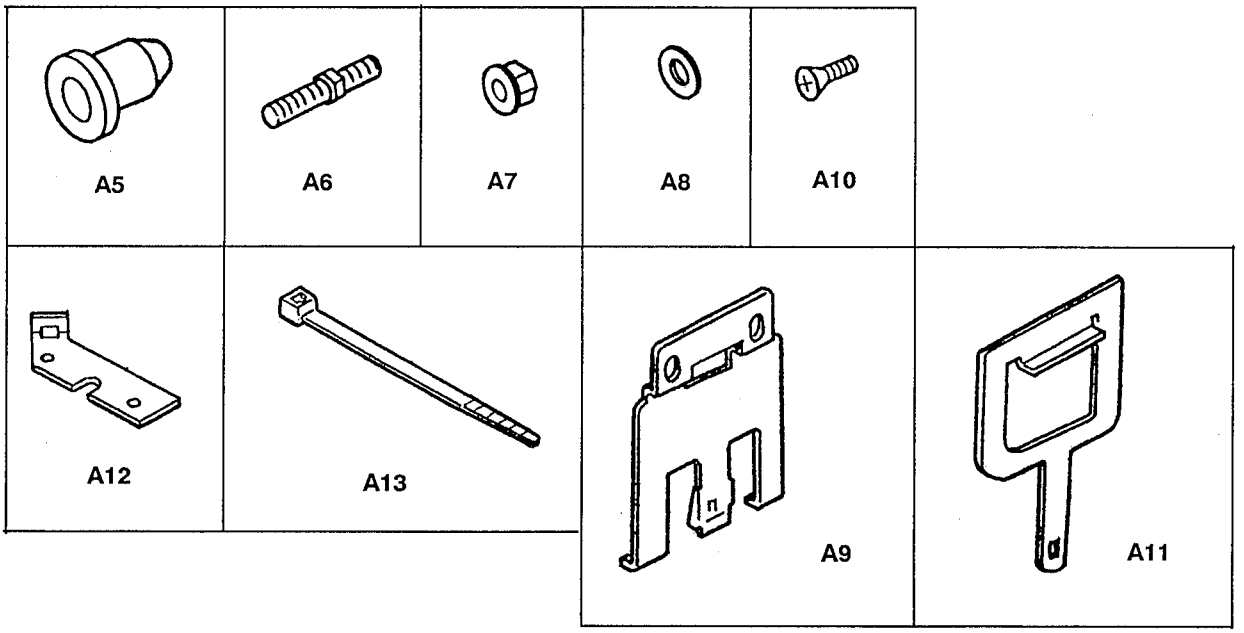
■ Breakdown of screw kit (KIT 1)